AIR CONDITIONING SYSTEMS

WALL MOUNTED UNIT

- **USER'S MANUAL**
- **ΕΓΧΕΙΡΙΔΙΟ ΧΡΗΣΗΣ**
- **MANUAL UTILIZATORULUI**

MODELS:

P9MVI32-09WiFi / P9MVO32-09
P9MVI32-12WiFi / P9MVO32-12
P9MVI32-18WiFi / P9MVO32-18
P9MVI32-24WiFi / P9MVO32-24

ENGLISH | ΕΛΛΗΝΙΚΑ | ROMANA

Table of Contents

Owner's Manual

0 **Safety Precautions**.....04

1 **Unit Specifications and Features**.....06

2 **Manual Operation (Without Remote)**.....11

3 Care and Maintenance.....12

4 Troubleshooting.....14

5 European Disposal Guidelines.....18

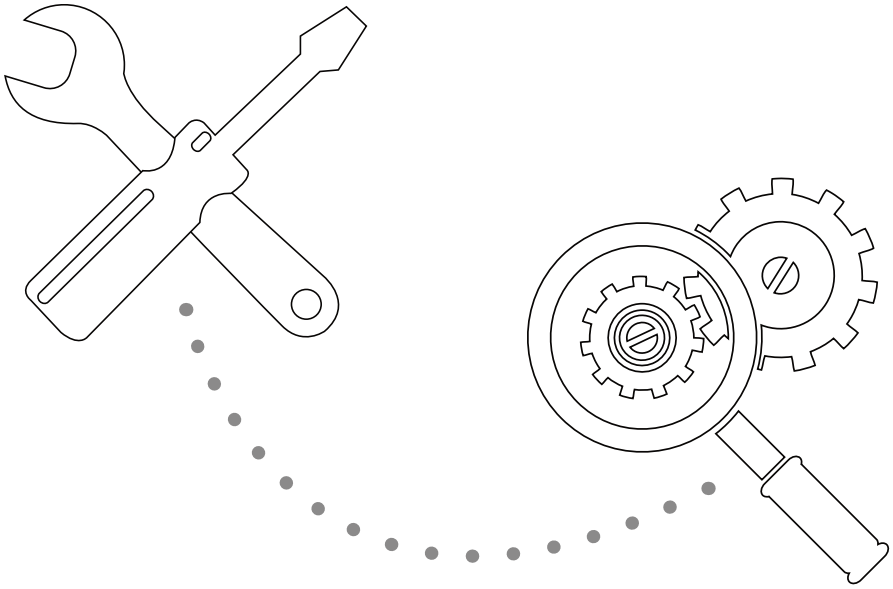

Caution: **Risk of fire/ flammable materials**
(For R32/R290 units only)

WARNING: Servicing shall only be performed as recommended by the equipment manufacturer. Maintenance and repair requiring the assistance of other skilled personnel shall be carried out under the supervision of the person competent in the use of "flammable refrigerants". For more details ,please refer to the Information on servicing on INSTALLATION MANUAL (This is only required for the unit adopts R32/R290 Refrigerant).

Safety Precautions

Read Safety Precautions Before Installation

Incorrect installation due to ignoring instructions can cause serious damage or injury.
The seriousness of potential damage or injuries is classified as either a **WARNING** or **CAUTION**.

WARNING

This symbol indicates that ignoring instructions may cause death or serious injury.

CAUTION

This symbol indicates that ignoring instructions may cause moderate injury to your person, or damage to your appliance or other property.

WARNING

This appliance can be used by children aged from 8 years and above and persons with reduced physical, sensory or mental capabilities or lack of experience and knowledge if they have been given supervision or instruction concerning use of the appliance in a safe way and understand the hazards involved. Children shall not play with the appliance. Cleaning and user maintenance shall not be made by children without supervision.

INSTALLATION WARNINGS

- Ask an authorized dealer to install this air conditioner. Inappropriate installation may cause water leakage, electric shock, or fire.
- All repairs, maintenance and relocation of this unit must be performed by an authorized service technician. Inappropriate repairs can lead to serious injury or product failure.

WARNINGS FOR PRODUCT USE

- If an abnormal situation arises (like a burning smell), immediately turn off the unit and pull the power plug. Call your dealer for instructions to avoid electric shock, fire or injury.
- **Do not** insert fingers, rods or other objects into the air inlet or outlet. This may cause injury, since the fan may be rotating at high speeds.
- **Do not** use flammable sprays such as hair spray, lacquer or paint near the unit. This may cause fire or combustion.
- **Do not** operate the air conditioner in places near or around combustible gases. Emitted gas may collect around the unit and cause explosion.
- **Do not** operate the air conditioner in a wet room (e.g., bathroom or laundry room). This can cause electrical shock and cause the product to deteriorate.
- **Do not** expose your body directly to cool air for a prolonged period of time.

ELECTRICAL WARNINGS

- Only use the specified power cord. If the power cord is damaged, it must be replaced by the manufacturer or certified service agent.
- Keep power plug clean. Remove any dust or grime that accumulates on or around the plug. Dirty plugs can cause fire or electric shock.
- **Do not** pull power cord to unplug unit. Hold the plug firmly and pull it from the outlet. Pulling directly on the cord can damage it, which can lead to fire or electric shock.
- **Do not** use an extension cord, manually extend the power cord, or connect other appliances to the same outlet as the air conditioner. Poor electrical connections, poor insulation, and insufficient voltage can cause fire.

CLEANING AND MAINTENANCE WARNINGS

- Turn off the device and pull the plug before cleaning. Failure to do so can cause electrical shock.
- **Do not** clean the air conditioner with excessive amounts of water.
- **Do not** clean the air conditioner with combustible cleaning agents. Combustible cleaning agents can cause fire or deformation.

CAUTION

- If the air conditioner is used together with burners or other heating devices, thoroughly ventilate the room to avoid oxygen deficiency.
- Turn off the air conditioner and unplug the unit if you are not going to use it for a long time.
- Turn off and unplug the unit during storms.
- Make sure that water condensation can drain unhindered from the unit.
- **Do not** operate the air conditioner with wet hands. This may cause electric shock.
- **Do not** use device for any other purpose than its intended use.
- **Do not** climb onto or place objects on top of the outdoor unit.
- **Do not** allow the air conditioner to operate for long periods of time with doors or windows open, or if the humidity is very high.

Explanation of symbols displayed on the indoor unit or outdoor unit:
(For the unit adopts R32/R290 Refrigerant only):

	WARNING	This symbol shows that this appliance used a flammable refrigerant. If the refrigerant is leaked and exposed to an external ignition source, there is a risk of fire.
	CAUTION	This symbol shows that the operation manual should be read carefully.
	CAUTION	This symbol shows that a service personnel should be handling this equipment with reference to the installation manual.
	CAUTION	
	CAUTION	This symbol shows that information is available such as the operating manual or installation manual.

Unit Specifications and Features

1

Unit Parts

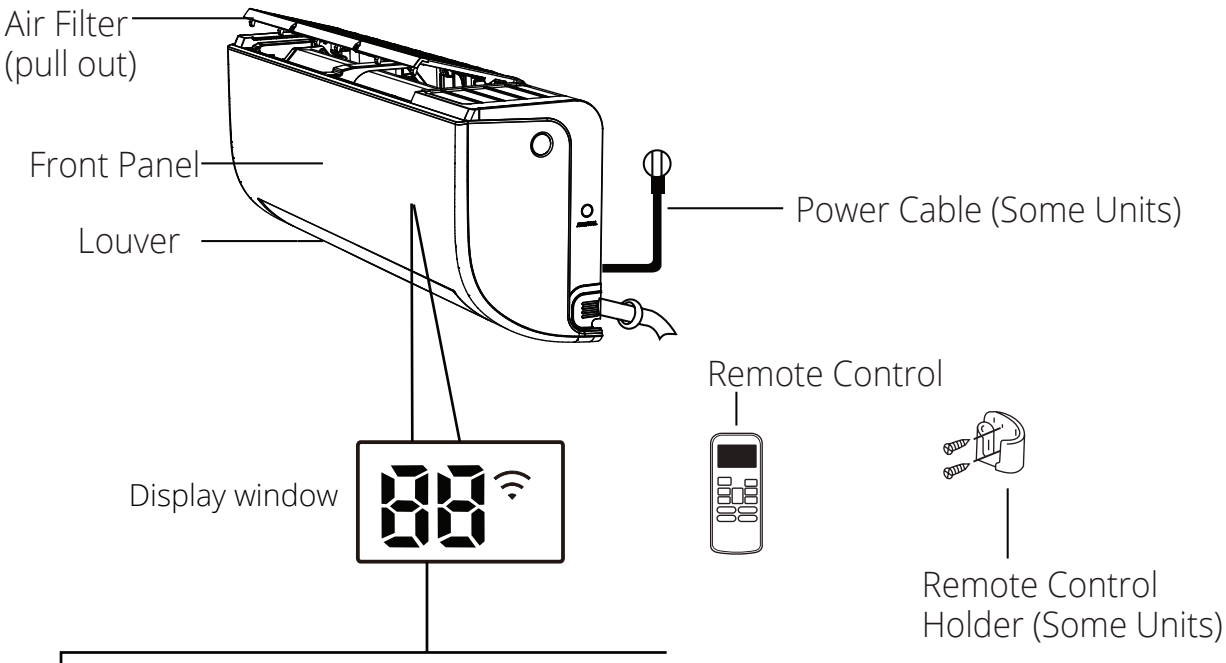

" ON " for 3 seconds when:
- TIMER ON is set
- FRESH, SWING, TURBO, or SILENCE features are turned on

" OF " for 3 seconds when:
- TIMER OFF is set
- FRESH, SWING, TURBO, or SILENCE features are turned off

" cF " when anti-cold air feature is turned on(cooling & heating units)

" dF " when defrosting(cooling & heating units)

" SC " when unit is self-cleaning(some units)

" FP " when freeze protection is turned on(some units)

" " when Wireless Control feature is activated(some units)

" 88" When ECO function(some units) is activated, the '88' illuminates gradually one by one as E- C -- 0 --set temperature-- E..... in one second interval.

In other modes, the unit will display your temperature setting.
In Fan and Dry mode, the unit will display the room temperature.

Display Code Meanings

NOTE: A guide on using the infrared remote is not included in this literature package.

Achieving Optimal Performance

Optimal performance for the COOL, HEAT, and DRY modes can be achieved in the following temperature ranges. When your air conditioner is used outside of these ranges, certain safety protection features will activate and cause the unit to perform less than optimally.

Inverter Split Type

	COOL mode	HEAT mode	DRY mode
Room Temperature	17°C - 32°C (63°F - 90°F)	0°C - 30°C (32°F - 86°F)	10°C - 32°C (50°F - 90°F)
Outdoor Temperature	0°C - 50°C (32°F - 122°F)	-15°C - 30°C (5°F - 86°F)	0°C - 50°C (32°F - 122°F)
	-15°C - 50°C (5°F - 122°F) (For models with low temp. cooling systems.)		
	0°C - 60°C (32°F - 140°F) (For special tropical models)		0°C - 60°C (32°F - 140°F) (For special tropical models)

FOR OUTDOOR UNITS WITH AUXILIARY ELECTRIC HEATER

When outside temperature is below 0°C (32°F), we strongly recommend keeping the unit plugged in at all time to ensure smooth ongoing performance.

Fixed-speed Type

	COOL mode	HEAT mode	DRY mode
Room Temperature	17°-32°C (63°-90°F)	0°-30°C (32°-86°F)	13°-32°C (50°-90°F)
Outdoor Temperature	18°-43°C (64°-109°F)	-7°-24°C (19°-75°F)	18°-43°C (64°-109°F)
	-7°-43°C (19°-109°F) (For models with low-temp cooling systems)		18°-43°C (64°-109°F)
	18°-54°C (64°-129°F) (For special tropical models)		18°-54°C (64°-129°F) (For special tropical models)

To further optimize the performance of your unit, do the following:

- Keep doors and windows closed.
- Limit energy usage by using TIMER ON and TIMER OFF functions.
- Do not block air inlets or outlets.
- Regularly inspect and clean air filters.

For a detailed explanation of each function, refer to the **Remote Control Manual.**

Other Features

- **Auto-Restart**
  If the unit loses power, it will automatically restart with the prior settings once power has been restored.

- **Anti-mildew (not included in this model)**
  When turning off the unit from COOL, AUTO (COOL), or DRY modes, the air conditioner will continue operate at very low power to dry up condensed water and prevent mildew growth.

- **Mute Operation**
  Press the LED button on the remote control can turn off the indoor screen display, and also turn off the air conditioner buzzer, which create a comfortable and quiet environment.

- **Wireless Control**
  Wireless control allows you to control your air conditioner using your mobile phone and a Wireless connection.

- **Louver Angle Memory**
  When turning on your unit, the louver will automatically resume its former angle.

- **Refrigerant Leakage Detection**
  The indoor unit will automatically display "EC" when it detects refrigerant leakage.

For a detailed explanation of your unit's advanced functionality (such as TURBO mode and its self-cleaning functions), refer to the **Remote Control Manual.**

NOTE ON ILLUSTRATIONS

Illustrations in this manual are for explanatory purposes. The actual shape of your indoor unit may be slightly different. The actual shape shall prevail.

· Setting Angle of Air Flow

Setting horizontal angle of air flow

The horizontal angle of the airflow must be set manually. Grip the deflector rod (See **Fig.B**) and manually adjust it to your preferred direction. **For some units,** the horizontal angle of the airflow can be set by remote control. please refer to the Remote Control Manual.

NOTE ON LOUVER ANGLES

When using COOL or DRY mode, do not set louver at too vertical an angle for long periods of time. This can cause water to condense on the louver blade, which will drop on your floor or furnishings. (See **Fig.A**)

When using COOL or HEAT mode, setting the louver at too vertical an angle can reduce the performance of the unit due to restricted air flow.

Do not move louver by hand. This will cause the louver to become out of sync. If this occurs, turn off the unit and unplug it for a few seconds, then restart the unit. This will reset the louver.

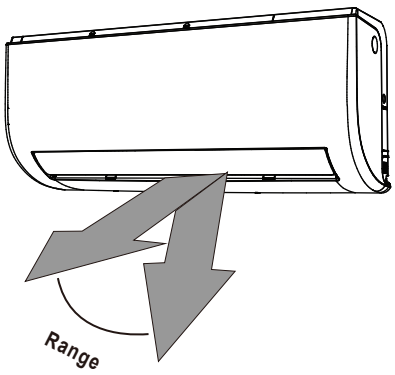

⚠ Caution: Do not keep louver at too vertical an angle for long periods of time. This can cause water condensation to drip on your furnishings.

Fig. A

! CAUTION

Do not put your fingers in or near the blower and suction side of the unit. The high-speed fan inside the unit may cause injury.

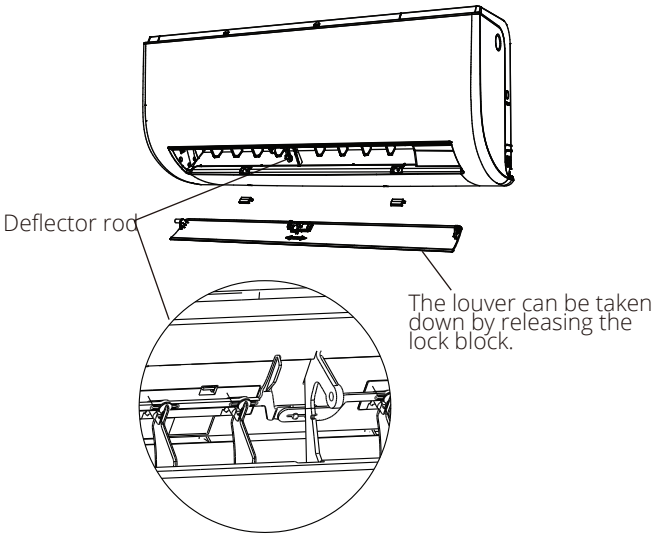

Fig. B

· Sleep Operation

The SLEEP function is used to decrease energy use while you sleep (and don't need the same temperature settings to stay comfortable). This function can only be activated via remote control.

Press the**SLEEP** button when you are ready to go to sleep. When in COOL mode, the unit will increase the temperature by 1°C (2°F) after 1 hour, and will increase an additional 1°C (2°F) after another hour. When in HEAT mode, the unit will decrease the temperature by 1°C (2°F) after 1 hour, and will decrease an additional 1°C (2°F) after another hour.

It will hold the new temperature for 5 hours, then the unit will turn off automatically.

Note: The SLEEP function is not available in FAN or DRY mode.

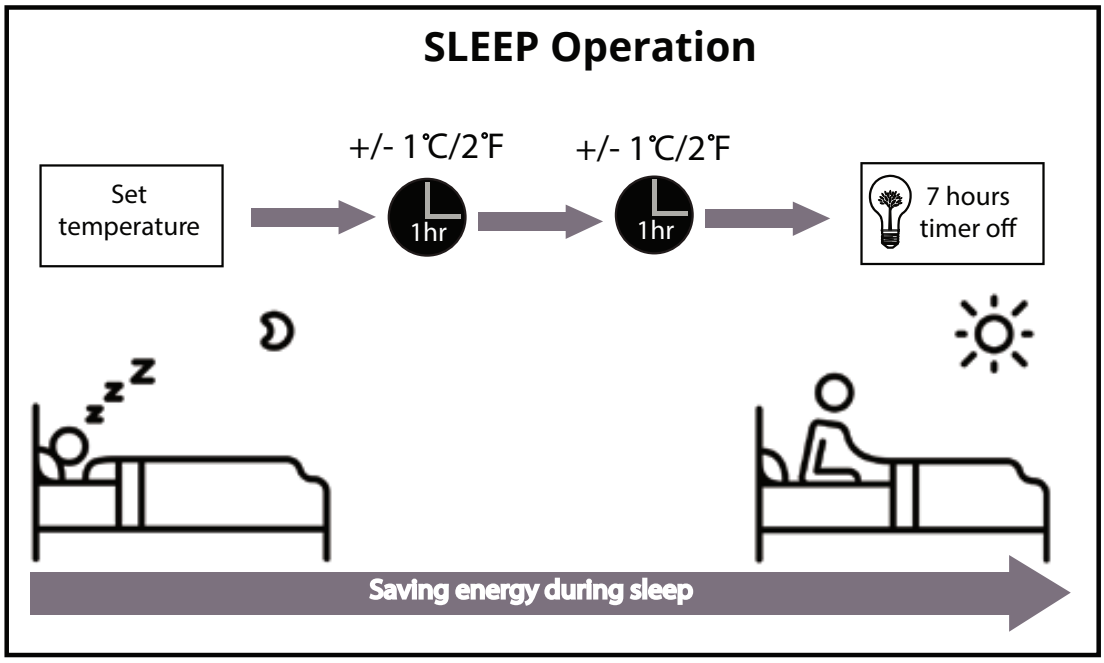

Manual Operation (Without Remote) 2

How to operate your unit without the remote control

In the event that your remote control fails to work, your unit can be operated manually with the **MANUAL CONTROL**button located on the indoor unit. Note that manual operation is not a long-term solution, and that operating the unit with your remote control is strongly recommended.

BEFORE MANUAL OPERATION

Unit must be turned off before manual operation.

To operate your unit manually:

1. Locate the**MANUAL CONTROL button** on the right-hand side panel of the unit.
2. Press the**MANUAL CONTROL button** one time to activate FORCED AUTO mode.
3. Press the**MANUAL CONTROL button** again to activate FORCED COOLING mode.
4. Press the **MANUAL CONTROL button** a third time to turn the unit off.

CAUTION

The manual button is intended for testing purposes and emergency operation only. Please do not use this function unless the remote control is lost and it is absolutely necessary. To restore regular operation, use the remote control to activate the unit.

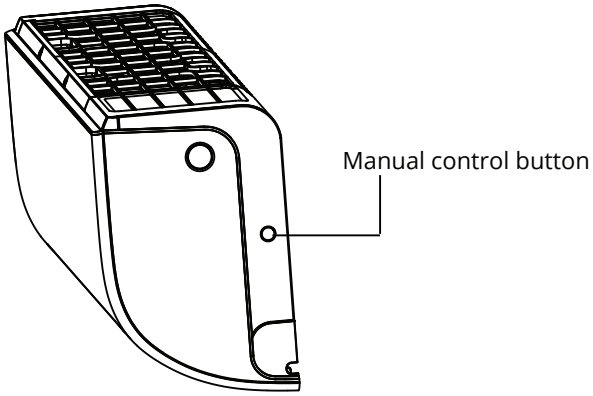

Care and Maintenance

3

Cleaning Your Indoor Unit

BEFORE CLEANING OR MAINTENANCE

ALWAYS TURN OFF YOUR AIR CONDITIONER SYSTEM AND DISCONNECT ITS POWER SUPPLY BEFORE CLEANING OR MAINTENANCE.

CAUTION

Only use a soft, dry cloth to wipe the unit clean. If the unit is especially dirty, you can use a cloth soaked in warm water to wipe it clean.

- **Do not** use chemicals or chemically treated cloths to clean the unit
- **Do not** use benzene, paint thinner, polishing powder or other solvents to clean the unit. They can cause the plastic surface to crack or deform.
- **Do not** use water hotter than 40°C (104°F) to clean the front panel. This can cause the panel to deform or become discolored.

Cleaning Your Air Filter

A clogged air conditioner can reduce the cooling efficiency of your unit, and can also be bad for your health. Make sure to clean the filter once every two weeks.

1. The air filter is under the top air inlet grill.
2. Grip the tab on the end of the filter, lift it up,then pull it towards yourself.
3. If your filter has a small air freshening filter, unclip it from the larger filter. Clean this air freshening filter with a hand-held vacuum.
4. Clean the large air filter with warm, soapy water. Be sure to use a mild detergent.
5. Rinse the filter with fresh water, then shake off excess water.
6. Dry it in a cool, dry place, and refrain from exposing it to direct sunlight.
7. When dry, re-clip the air freshening filter to the larger filter, then slide it back into the indoor unit.

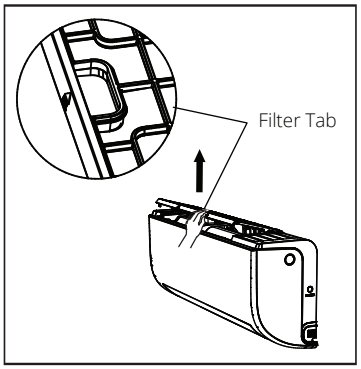

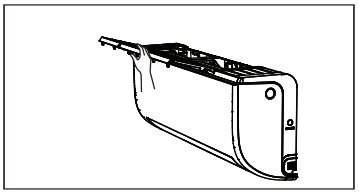

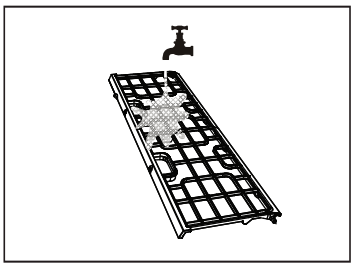

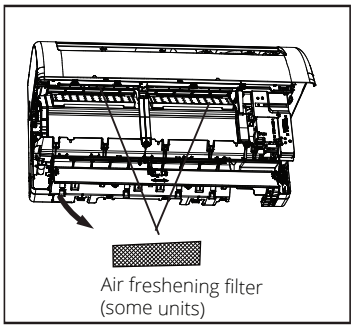

CAUTION

Do not touch air freshening (Plasma) filter for at least 10 minutes after turning off the unit.

CAUTION

- Before changing the filter or cleaning, turn off the unit and disconnect its power supply.
- When removing filter, do not touch metal parts in the unit. The sharp metal edges can cut you.
- Do not use water to clean the inside of the indoor unit. This can destroy insulation and cause electrical shock.
- Do not expose filter to direct sunlight when drying. This can shrink the filter.

CAUTION

- Any maintenance and cleaning of outdoor unit should be performed by an authorized dealer or a licensed service provider.
- Any unit repairs should be performed by an authorized dealer or a licensed service provider.

Maintenance – Long Periods of Non-Use

If you plan not to use your air conditioner for an extended period of time, do the following:

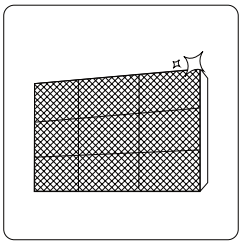

Clean all filters

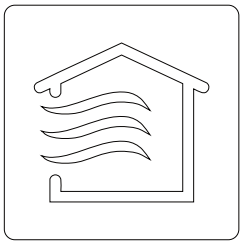

Turn on FAN function until unit dries out completely

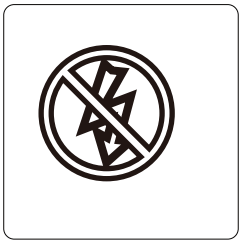

Turn off the unit and disconnect the power

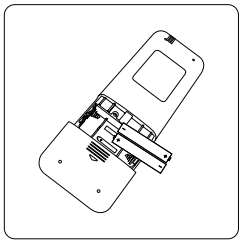

Remove batteries from remote control

Maintenance – Pre-Season Inspection

After long periods of non-use, or before periods of frequent use, do the following:

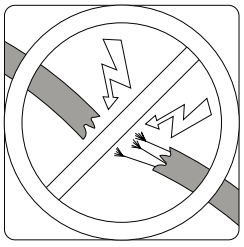

Check for damaged wires

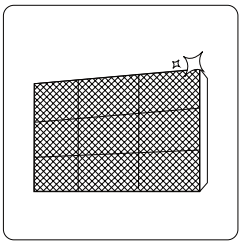

Clean all filters

Check for leaks

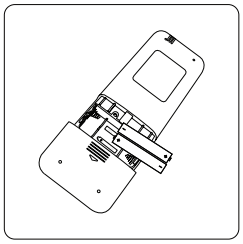

Replace batteries

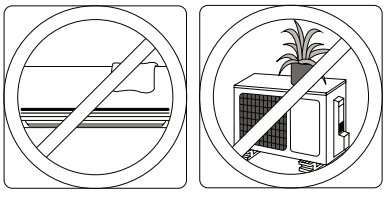

Make sure nothing is blocking all air inlets and outlets

Troubleshooting 4

SAFETY PRECAUTIONS

If ANY of the following conditions occurs, turn off your unit immediately!

- The power cord is damaged or abnormally warm
- You smell a burning odor
- The unit emits loud or abnormal sounds
- A power fuse blows or the circuit breaker frequently trips
- Water or other objects fall into or out of the unit

DO NOT ATTEMPT TO FIX THESE YOURSELF! CONTACT AN AUTHORIZED SERVICE PROVIDER IMMEDIATELY!

Common Issues

The following problems are not a malfunction and in most situations will not require repairs.

Issue	Possible Causes
Unit does not turn on when pressing ON/OFF button	The Unit has a 3-minute protection feature that prevents the unit from overloading. The unit cannot be restarted within three minutes of being turned off.
The unit changes from COOL/HEAT mode to FAN mode	The unit may change its setting to prevent frost from forming on the unit. Once the temperature increases, the unit will start operating in the previously selected mode again.
	The set temperature has been reached, at which point the unit turns off the compressor. The unit will continue operating when the temperature fluctuates again.
The indoor unit emits white mist	In humid regions, a large temperature difference between the room's air and the conditioned air can cause white mist.
Both the indoor and outdoor units emit white mist	When the unit restarts in HEAT mode after defrosting, white mist may be emitted due to moisture generated from the defrosting process.

Issue	Possible Causes
The indoor unit makes noises	A rushing air sound may occur when the louver resets its position.
	A squeaking sound may occur after running the unit in HEAT mode due to expansion and contraction of the unit's plastic parts.
Both the indoor unit and outdoor unit make noises	Low hissing sound during operation: This is normal and is caused by refrigerant gas flowing through both indoor and outdoor units.
	Low hissing sound when the system starts, has just stopped running, or is defrosting: This noise is normal and is caused by the refrigerant gas stopping or changing direction.
	Squeaking sound: Normal expansion and contraction of plastic and metal parts caused by temperature changes during operation can cause squeaking noises.
The outdoor unit makes noises	The unit will make different sounds based on its current operating mode.
Dust is emitted from either the indoor or outdoor unit	The unit may accumulate dust during extended periods of non-use, which will be emitted when the unit is turned on. This can be mitigated by covering the unit during long periods of inactivity.
The unit emits a bad odor	The unit may absorb odors from the environment (such as furniture, cooking, cigarettes, etc.) which will be emitted during operations.
	The unit's filters have become moldy and should be cleaned.
The fan of the outdoor unit does not operate	During operation, the fan speed is controlled to optimize product operation.
Operation is erratic, unpredictable, or unit is unresponsive	Interference from cell phone towers and remote boosters may cause the unit to malfunction. In this case, try the following: • Disconnect the power, then reconnect. • Press ON/OFF button on remote control to restart operation.

NOTE: If problem persists, contact a local dealer or your nearest customer service center. Provide them with a detailed description of the unit malfunction as well as your model number.

Troubleshooting

When troubles occur, please check the following points before contacting a repair company.

Problem	Possible Causes	Solution
Poor Cooling Performance	Temperature setting may be higher than ambient room temperature	Lower the temperature setting
	The heat exchanger on the indoor or outdoor unit is dirty	Clean the affected heat exchanger
	The air filter is dirty	Remove the filter and clean it according to instructions
	The air inlet or outlet of either unit is blocked	Turn the unit off, remove the obstruction and turn it back on
	Doors and windows are open	Make sure that all doors and windows are closed while operating the unit
	Excessive heat is generated by sunlight	Close windows and curtains during periods of high heat or bright sunshine
	Too many sources of heat in the room (people, computers, electronics, etc.)	Reduce amount of heat sources
	Low refrigerant due to leak or long-term use	Check for leaks, re-seal if necessary and top off refrigerant
	SILENCE function is activated(optional function)	SILENCE function can lower product performance by reducing operating frequency. Turn off SILENCE function.

Problem	Possible Causes	Solution
The unit is not working	Power failure	Wait for the power to be restored
	The power is turned off	Turn on the power
	The fuse is burned out	Replace the fuse
	Remote control batteries are dead	Replace batteries
	The Unit's 3-minute protection has been activated	Wait three minutes after restarting the unit
	Timer is activated	Turn timer off
The unit starts and stops frequently	There's too much or too little refrigerant in the system	Check for leaks and recharge the system with refrigerant.
	Incompressible gas or moisture has entered the system.	Evacuate and recharge the system with refrigerant
	The compressor is broken	Replace the compressor
	The voltage is too high or too low	Install a manostat to regulate the voltage
Poor heating performance	The outdoor temperature is exetremtly low	Use auxiliary heating device
	Cold air is entering through doors and windows	Make sure that all doors and windows are closed during use
	Low refrigerant due to leak or long-term use	Check for leaks, re-seal if necessary and top off refrigerant
Indicator lamps continue flashing	The unit may stop operation or continue to run safely. If the indicator lamps continue to flash or error codes appear, wait for about 10 minutes. The problem may resolve itself. If not, disconnect the power, then connect it again. Turn the unit on. If the problem persists, disconnect the power and contact your nearest customer service center.	
Error code appears in the window display of indoor unit: · **E0, E1, E2...** · **P1, P2, P3...** · **F1, F2, F3...**		

NOTE: If your problem persists after performing the checks and diagnostics above, turn off your unit immediately and contact an authorized service center.

European Disposal Guidelines

5

This appliance contains refrigerant and other potentially hazardous materials. When disposing of this appliance, the law requires special collection and treatment. **Do not** dispose of this product as household waste or unsorted municipal waste.

When disposing of this appliance, you have the following options:

- Dispose of the appliance at designated municipal electronic waste collection facility.
- When buying a new appliance, the retailer will take back the old appliance free of charge.
- The manufacturer will take back the old appliance free of charge.
- Sell the appliance to certified scrap metal dealers.

Special notice

Disposing of this appliance in the forest or other natural surroundings endangers your health and is bad for the environment. Hazardous substances may leak into the ground water and enter the food chain.

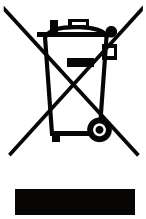

Activate your Warranty

- **Visit our web site and activate your warranty via the below link or by scanning the QR code**

https://www.inventoraircondition er.com/warranty-inventor

- **Fill all the fields as shown below**

To activate the warranty card, please fill in the following fields

Owner details

Full Name*

Address*

Postal Code*

Phone Number*

E-mail*

Subscribe to Inventor's Newsletter

Unit details

Unit Type*

Serial Number of the indoor unit*

Serial Number of the outdoor unit*

Date of Purchase*

Invoice Number*

Additional Details

*** Required field**

With the current warranty card you accept **the terms and conditions.**

SEND

☑ once the warranty submission has been completed a confirmation message will be sent to your email

ΠΙΝΑΚΑΣ ΠΕΡΙΕΧΟΜΕΝΩΝ

Εγχειρίδιο Χρήστη

0 **Οδηγίες Ασφαλείας** 04

1 **Χαρακτηριστικά και Λειτουργίες της μονάδας** .. 06

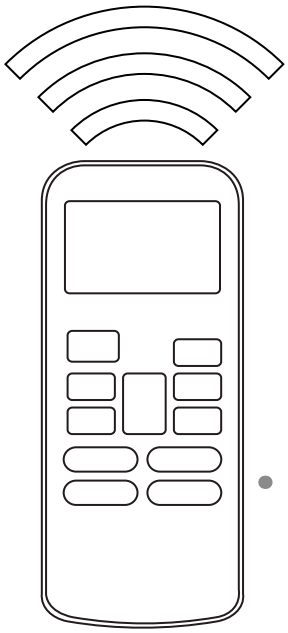

2 **Χειροκίνητη Λειτουργία**
(Χωρίς Τηλεχειριστήριο) 11

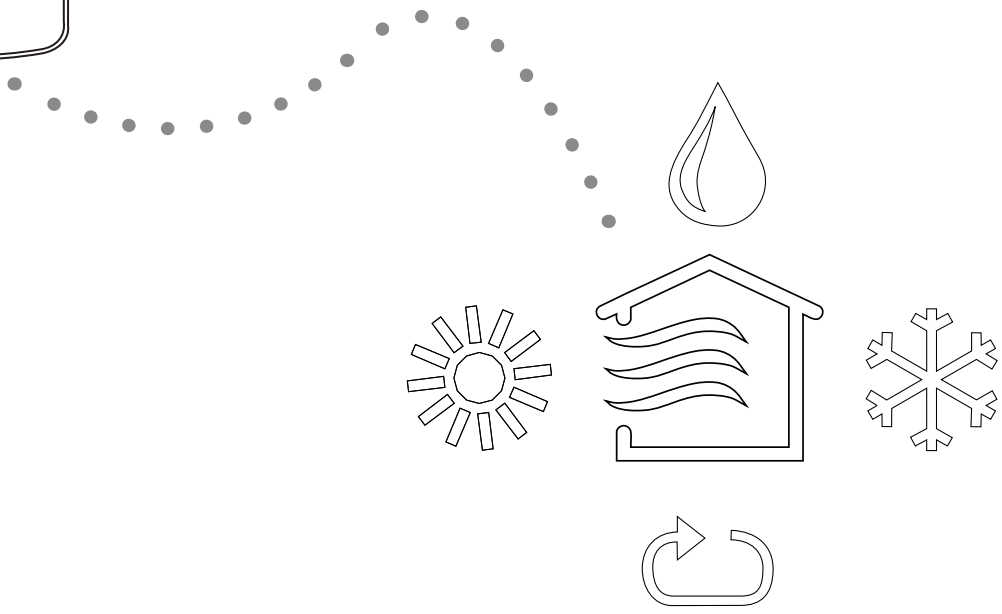

3 Φροντίδα και Συντήρηση 12

4 Σφάλματα 14

5 Ευρωπαϊκές Προδιαγραφές Απόρριψης 18

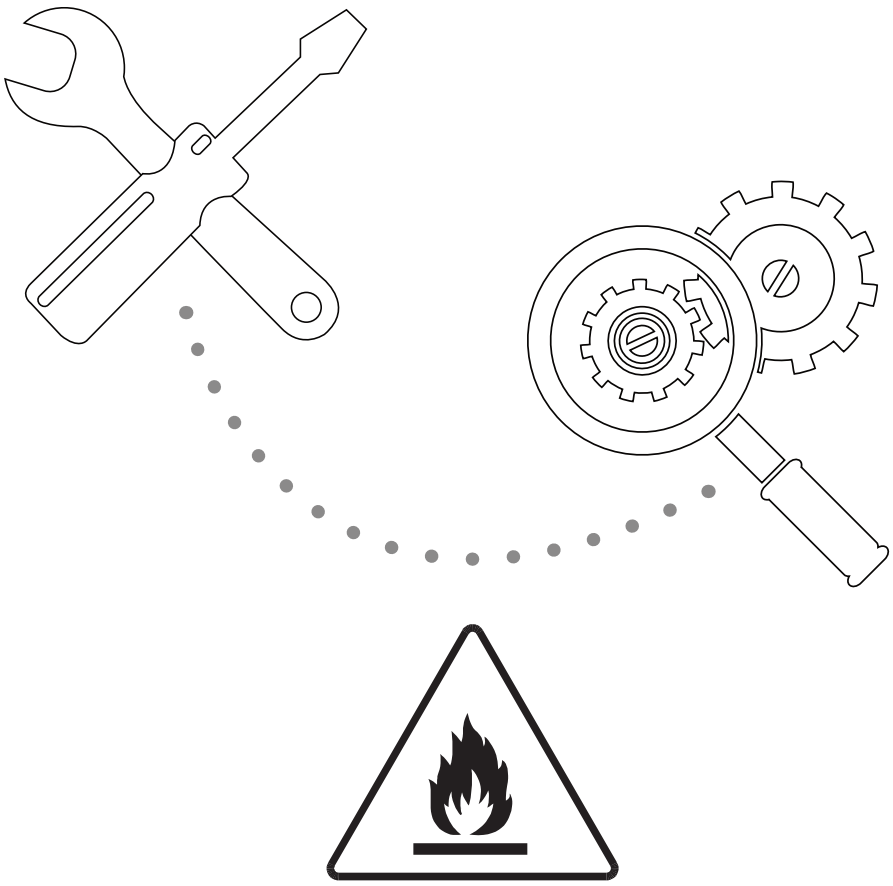

***Προσοχή:* Κίνδυνος πυρκαγιάς**

(αφορά τα μοντέλα με ψυκτικό υγρό R32/R290)

ΠΡΟΕΙΔΟΠΟΙΗΣΗ: Η συντήρηση και η επισκευή του κλιματιστικού θα πρέπει να πραγματοποιείται βάσει των οδηγιών που ορίζει ο κατασκευαστής. Η συντήρηση και η επισκευή του κλιματιστικού θα πρέπει να διεξάγεται από αδειοδοτημένο τεχνικό, εξειδικευμένο στη χρήση εύφλεκτων ψυκτικών μέσων. Για περισσότερες λεπτομέρειες, ανατρέξτε στην ενότητα «Πληροφορίες σχετικά με την Επισκευή και Συντήρηση» στο εγχειρίδιο εγκατάστασης (Αυτό απαιτείται μόνο για μονάδες που λειτουργούν με ψυκτικό υγρό R32 / R290).

Οδηγίες Ασφαλείας

Διαβάστε τις Οδηγίες Ασφαλείας Πριν την Εγκατάσταση

Εσφαλμένη εγκατάσταση λόγω αγνόησης των οδηγιών μπορεί να προκαλέσει σοβαρές καταστροφές ή τραυματισμούς. Η σοβαρότητα πιθανών καταστροφών ή τραυματισμών αναφέρεται είτε ως ΠΡΟΕΙΔΟΠΟΙΗΣΗ είτε ως ΠΡΟΣΟΧΗ

ΠΡΟΕΙΔΟΠΟΙΗΣΗ

Αυτό το σύμβολο δείχνει ότι η αγνόησή του μπορεί να προκαλέσει θάνατο ή σοβαρό τραυματισμό.

ΠΡΟΣΟΧΗ

Αυτό το σύμβολο δείχνει ότι αγνοώντας τις οδηγίες μπορεί να προκληθεί τραυματισμός ή καταστροφή στην συσκευή ή σε άλλη ιδιοκτησία.

ΠΡΟΕΙΔΟΠΟΙΗΣΗ

Αυτή η μονάδα μπορεί να χρησιμοποιηθεί από άτομα πάνω από 8 ετών και από άτομα με ειδικές ανάγκες ή έλλειψη εμπειρίας και γνώσης αρκεί να επιβλέπονται από άτομα υπεύθυνα για την ασφαλειά τους. Βεβαιωθείτε πως τα παιδιά δεν παίζουν με τη μονάδα. Ο καθαρισμός και η συντήρησή τους δεν πρέπει να γίνονται χωρίς επίβλεψη

ΠΡΟΕΙΔΟΠΟΙΗΣΕΙΣ ΕΓΚΑΤΑΣΤΑΣΗΣ

• Ρωτήστε εξειδικευμένο εμπορικό δίκτυο για την εγκατάσταση του κλιματιστικού. Εσφαλμένη εγκατάσταση μπορεί να προκαλέσει διαρροή νερού, ηλεκτροπληξία, ή πυρκαγιά.
• Η επισκευή, διατήρηση και μετακίνηση της μονάδας πρέπει να πραγματοποιείται από εξειδικευμένο τεχνικό. Εσφαλμένες επισκευές μπορεί να οδηγήσουν σε τραυματισμούς ή σοβαρές ζημιές στο προϊόν

ΠΡΟΕΙΔΟΠΟΙΗΣΕΙΣ ΚΑΤΑ ΤΗ ΧΡΗΣΗ ΤΟΥ ΠΡΟΪΟΝΤΟΣ

- Αν παρουσιαστεί ασυνήθιστη κατάσταση (όπως μυρωδιά καμμένου), αμέσως απενεργοποιήστε τη μονάδα και αποσυνδέστε από τη πρίζα. Καλέστε τον προμηθευτή σας για οδηγίες ώστε να αποφύγετε ηλεκτροπληξία, φωτιά ή τραυματισμό.
- Μην βάζετε τα δάχτυλά σας, ράβδους ή άλλα αντικείμενα μέσα στην είσοδο και έξοδο αέρα. Αυτό μπορεί να προκαλέσει τραυματισμό, αφού ο ανεμιστήρας μπορεί να περιστρέφεται σε ηψηλές ταχύτητες.
- Μην χρησιμοποιείτε εύφλεκτα σπρέυ όπως σπρέυ μαλλιών, βερνίκια ή χρώματα κοντά στη μονάδα. Αυτό μπορεί να προκαλέσει φωτιά ή έκκρηξη.
- Μην χρησιμοποιείτε το κλιματιστικό σε μέρη κοντά ή γύρω από εύφλεκτα αέρια. Αποβαλλόμενο αέριο μπορεί να μαζευτεί γύρω από τη μονάδα και να προκαλέσει έκκρηξη.
- Μην χρημοποιείτε το κλιματιστικό σε δωμάτιο με νερό (πχ. μπάνιο ή δωμάτιο με μπουγάδα). Αυτό μπορεί να προκαλέσει ηλεκτροπληξία και να προκαλέσει καταστροφές στο προϊόν.
- Μην εκθέτετε το σώμα σας ακριβώς μπροστά από το κλιματιστικό για πολλή ώρα.

ΠΡΟΕΙΔΟΠΟΙΗΣΕΙΣ ΡΕΥΜΑΤΟΣ

- Χρησιμοποιήστε συγκεκριμένο καλώδιο παροχής ρεύματος. Αν είναι κατεστραμμένο, θα πρέπει να αντικατασταθεί από τον κατασκευαστή ή από πιστοποιημένο κέντρο σέρβις.
- Κρατήστε καθαρή τη πρίζα. Αφαιρέστε τη σκόνη και τη βρωμιά που έχει συγκεντρωθεί γύρω από τη πρίζα. Βρώμικες πρίζες μπορούν να προκαλέσουν φωτιά ή ηλεκτροπληξία.
- Μην τραβάτε το καλώδιο για να αποσυνδέσετε τη μονάδα. Κρατήστε σταθερά τα δυο μέρη και αφαιρέστε. Τραβώντας απότομα τη πρίζα μπορεί προκληθούν ζημιές, που μπορεί να οδηγήσουν σε φωτιά ή ηλεκτροπληξία.
- Μην χρησιμοποιείτε προέκταση καλωδίου, μην προεκτείνετε χειροκίνητα το καλώδιο και μην συνδέετε άλλες συσκευές στην ίδια πρίζα με το κλιματιστικό. Κακή ηλεκτρολογική σύνδεση, μειωμένη παροχή και αναποτελεσματική τάση μπορεί να προκαλέσουν πυρκαγιά.

ΠΡΟΕΙΔΟΠΟΙΗΣΕΙΣ ΚΑΘΑΡΙΣΜΟΥ ΚΑΙ ΣΥΝΤΗΡΗΣΗΣ

- Απενεργοποιήστε το μηχάνημα και αποσυνδέστε από τη πρίζα πριν καθαρίσετε. Διαφορετικά μπορεί να προκληθεί ηλεκτροπληξία.
- Μην καθαρίζετε το κλιματιστικό με μεγάλες ποσότητες νερού.
- Μην καθαρίζετε το κλιματιστικό με εύφλεκτα μέσα. Εύφλεκτες ουσίες μπορεί να προκαλέσουν φωτιά ή παραμόρφωση.

ΠΡΟΣΟΧΗ

- Αν το κλιματιστικό χρησιμοποιείτε μαζί με εστίες ή άλλες θερμαντικές συσκευές, αερίστε το δωμάτιο για επαρκές οξυγόνο στο χώρο.
- Απενεργοποιήστε το κλιματιστικό και αποσυνδέστε τη μονάδα αν δεν σκοπεύετε να την χρησιμοποιήσετε για αρκετό καιρό.
- Απενεργοποιήστε και αποσυνδέστε τη μονάδα κατά τη διάρκεια καταιγίδων.
- Βεβαιωθείτε ότι δεν εμποδίζεται η ροή του νερού στο σωλήνα.
- Μην χρησιμοποιείτε τη συσκευή με υγρά χέρια. Μπορεί να προκαλέσει ηλεκτροπληξία.
- Μην χρησιμοποιείτε τη μονάδα για διαφορετικό σκοπό από αυτόν που ενδείκνυται.
- Μην σκαρφαλώνετε και μην τοποθετείτε αντικείμενα πάνω στην εξωτερική μονάδα.
- Μην επιτρέπετε στο κλιματιστικό να λειτουργεί για μεγάλες περιόδους με ανοιχτά τα παράθυρα και τις πόρτες, ή αν η υγρασία είναι πολύ υψηλή.

Επεξήγηση συμβόλων που εμφανίζονται στην εσωτερική ή στην εξωτερική μονάδα:
(Για μονάδες με ψυκτικό μέσο R32 / R290):

	ΠΡΟΕΙΔΟ-ΠΟΙΗΣΗ	Αυτό το σύμβολο δείχνει ότι αυτή η συσκευή χρησιμοποιεί εύφλεκτο ψυκτικό μέσο. Αν το ψυκτικό υγρό διαρρεύσει ή εκτεθεί σε εξωτερική εύφλεκτη πηγή, υπάρχει κίνδυνος πυρκαγιάς.
	ΠΡΟΣΟΧΗ	Αυτό το σύμβολο σας ενημερώνει ώστε να διαβάσετε προσεκτικά το εγχειρίδιο λειτουργίας.
	ΠΡΟΣΟΧΗ	Αυτό το σύμβολο δείχνει ότι ο χειρισμός των κλιματιστικών μονάδων πρέπει να πραγματοποιείται μόνο από αδειοδοτημένους τεχνικούς, οι οποίοι οφείλουν να ανατρέχουν στο εγχειρίδιο εγκατάστασης.
	ΠΡΟΣΟΧΗ	
	ΠΡΟΣΟΧΗ	Αυτό το σύμβολο δείχνει ότι υπάρχουν διαθέσιμες πληροφορίες αναφορικά με τις λειτουργίες στο εγχειρίδιο χρήστη & το εγχειρίδιο εγκατάστασης.

Χαρακτηριστικά και Λειτουργίες της μονάδας

1

Μέρη Μονάδας

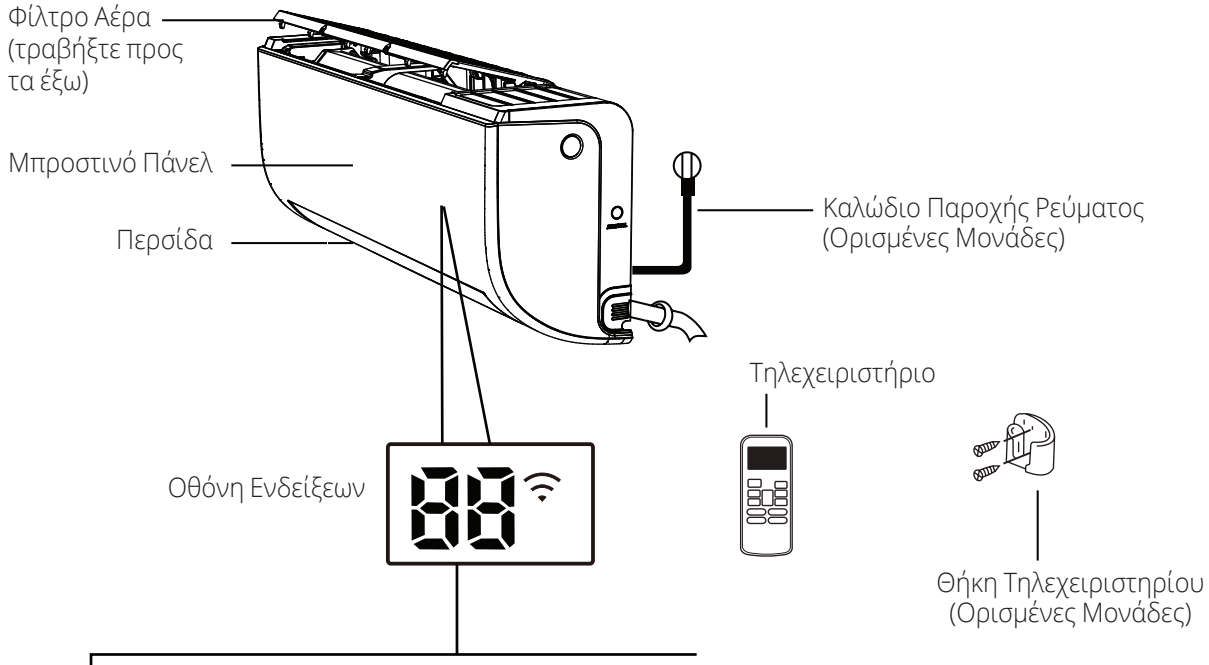

Σημασία Κωδικών στην Οθόνη

ON , για τρια δευτερόλεπτα όταν:
•Timer ON έχει ρυθμιστεί
• Fresh, Swing, Turbo or Silence λειτουργίες είναι ενεργοποιημένες

OF, για τρια δευτερόλεπτα όταν:
• Timer OFF έχει ρυμθιστεί
• Fresh, Swing, Turbo or Silence λειτουργίες απενεργοποιηθούν.

cF όταν ενεργοποιηθεί η λειτουργία προστασίας από ψυχρό αέρα.

dF υπό συνθήκες αποπάγωσης.

SC κατά τη λειτουργία αυτοκαθαρισμού

FP όταν ενεργοποιείται η προστασία από πάγο.

όταν ενεργοποιείται η λειτουργία WIFI Control.

88 Όταν ενεργοποιείται η λειτουργία ECO, η οθόνη φωτίζεται σταδιακά με τα γράμματα E -- C -- 0 --ρυθμισμένη θερμοκρασία θα εμφανιστεί με καθυστέρηση 1 δευτερολέπτου.

Σε άλλες καταστάσεις, η μονάδα εμφανίζει τις ρυθμίσεις θερμοκρασίας.
Σε κατάσταση FAN, η μονάδα θα δείξει τη θερμοκρασία δωματίου.

ΣΗΜΕΙΩΣΗ: Ο οδηγός χρήσης του τηλεχειριστηρίου δεν συμπεριλαμβάνεται σε αυτό το πακέτο.

ΒΕΛΤΙΣΤΗ ΑΠΟΔΟΣΗ

Ιδανική Απόδοση για καταστάσεις COOL, HEAT και DRY μπορεί να επιτευχθεί στο ακόλουθο θερμοκρασιακό εύρος. Όταν το κλιματιστικό λειτουργείται πέραν αυτού του εύρους, συγκεκριμένες λειτουργίες προστασίας θα ενεργοποιηθούν και θα κάνουν τη μονάδα να αποδίδει λιγότερο από το βέλτιστο.

Μονάδα Inverter

<table>
<tr><th></th><th>ΨΥΞΗ</th><th>ΘΕΡΜΑΝΣΗ</th><th>ΑΦΥΓΡΑΝΣΗ</th></tr>
<tr><td>Θερμοκρασία Δωματίου</td><td>17°C - 32°C
(63°F - 90°F)</td><td>0°C - 30°C
(32°F - 86°F)</td><td>10°C - 32°C
(50°F - 90°F)</td></tr>
<tr><td rowspan="3">Εξωτερική Θερμοκρασία</td><td>0°C - 50°C
(32°F - 122°F)</td><td rowspan="3">-15°C - 30°C
(5°F - 86°F)</td><td rowspan="2">0°C - 50°C
(32°F - 122°F)</td></tr>
<tr><td>-15°C - 50°C
(5°F - 122°F)
(Για μοντέλα με σύστημα χαμηλής θερμοκρασίας)</td></tr>
<tr><td>0°C - 60°C
(32°F - 140°F)
Για ειδικά μοντέλα</td><td>0°C - 60°C
(32°F - 140°F)
Για ειδικά μοντέλα</td></tr>
</table>

ΓΙΑ ΜΟΝΑΔΕΣ ΜΕ ΒΟΗΘΗΤΙΚΑ ΘΕΡΜΑΝΤΙΚΑ ΣΩΜΑΤΑ

΄Οταν η εξωτερική θερμοκρασία είναι κάτω από 0oC, συνιστούμε να κρατήσετε συνδεδεμένο στη πρίζα το κλιματιστικό σας για να διασφαλίσετε την απόδοσή του.

Fixed-speed Type

<table>
<tr><th></th><th>ΨΥΞΗ</th><th>ΘΕΡΜΑΝΣΗ</th><th>ΑΦΥΓΡΑΝΣΗ</th></tr>
<tr><td>Θερμοκρασία Δωματίου</td><td>17°-32°C (63°-90°F)</td><td>0°-30°C (32°-86°F)</td><td>13°-32°C (50°-90°F)</td></tr>
<tr><td rowspan="3">Εξωτερική Θερμοκρασία</td><td>18°-43°C (64°-109°F)</td><td rowspan="3">-7°-24°C (19°-75°F)</td><td>18°-43°C (64°-109°F)</td></tr>
<tr><td>-7°-43°C (19°-109°F)
(Για μοντέλα με σύστημα χαμηλής θερμοκρασίας)</td><td>18°-43°C (64°-109°F)</td></tr>
<tr><td>18°-54°C (64°-129°F)
Για ειδικά μοντέλα</td><td>18°-54°C (64°-129°F)
Για ειδικά μοντέλα</td></tr>
</table>

Για ακόμα πιο βέλτιστη απόδοση της μονάδας, ακολουθήστε:

- Κρατήστε τις πόρτες και τα παράθυρα κλειστά.
- Περιορισμένη κατανάλωση ενέργειας μέσω λειτουργιών TIMER ON και TIMER OFF.
- Μην μπλοκάρετε τις εισόδους και εξόδους αέρα.
- Επιθεωρείτε και καθαρίζετε συχνά τα φίλτρα.

Για λεπτομερή επεξήγηση κάθε λειτουργίας, ανατρέξτε στο εγχειρίδιο του τηλεχειριστηρίου.

Άλλες λειτουργίες

- **Αυτόματη Επανεκκίνηση**
  Μετά τη διακοπή ρεύματος, η μονάδα θα επανεκκινηθεί αυτόματα με τις αρχικές ρυθμίσεις μόλις επανέλθει το ρεύμα.

- **Αποφυγή δημιουργιας μούχλας (δεν διατίθεται σε αυτά τα μοντέλα)**
  Όταν απενεργοποιήσετε τη μονάδα από καταστάσεις COOL, AUTO (COOL) ή DRY, το κλιματιστικό θα συνεχίσει να λειτουργεί σε χαμηλή ταχύτητα για να απομακρύνει την υγρασία και να αποφευχθεί η δημιουργία μούχλας.

- **Σιγή λειτουργίας**
  Πατήστε το κουμπί LED στο τηλεχειριστήριο για να απενεργοποιήσετε την εσωτερική οθόνη, αλλά και να απενεργοποιήσετε το buzzer του κλιματιστικού, ώστε να δημιουργήσετε ένα άνετο και ήσυχο περιβάλλον.

- **Λειτουργία WiFi ελέγχου**
  Η σύνδεση με WiFi με την μονάδα σας επιτρέπει να μπορείτε να ελέγχεται ασύρματα με το κινητό τηλέφωνο σας το κλιματιστικό.

- **Απομνημόνευση θέσης περσίδων**
  Όταν ενεργοποιήσετε τη μονάδα η θέση της περσίδας αποθηκεύεται στην μνήμη και θα επιστρέψει στη θέση που είχε επιλεγεί τελευταία φορά από το χρήστη.

- **Ανίχνευση διαρροών ψυκτικού υγρού**
  Όταν ανιχνεύεται διαρροή ψυκτικού υγρού η εσωτερική μονάδα θα εμφανίσει τον κωδικό EC αυτόματα.

Για λεπτομερή επεξήγηση των προχωρημένων λειτουργιών της μονάδας (όπως TURBO κατάσταση και αυτοκαθαρισμού λειτουργία), ανατρέξτε στο **εγχειρίδιο χρήσης του τηλεχειριστηρίου.**

ΣΗΜΕΙΩΣΗ ΣΤΗΝ ΕΙΚΟΝΟΓΡΑΦΗΣΗ

Οι εικονογραφήσεις σε αυτό το εγχειρίδιο είναι για επεξηγηματικούς σκοπούς. Το πραγματικό σχήμα της εσωτερικής μονάδας μπορεί να διαφέρει ελαφρώς. Ισχύει το πραγματικό σχήμα.

• Ρυμθίζοντας τη γωνία διάχυσης του αέρα

Ρυθμίζοντας οριζόντια γωνία διάχυσης του αέρα

Η οριζόντια διάχυση του αέρα πρέπει να ρυθμιστεί χειροκίνητα. Μετακινήστε τον μοχλό εκτροπής (Βλέπε Εικ. Β) και χειροκίνητα προασαρμόστε το στην επιθυμητή κατεύθυνση. Για κάποιες μονάδες, η οριζόντια γωνία διάχυσης μπορεί να ρυθμιστεί από το τηλεχειριστήριο. Παρακαλείσθε να αντρέξετε στο εγχειρίδιο χρήσης του τηλεχειριστηρίου.

ΣΗΜΕΙΩΣΗ ΓΙΑ ΤΙΣ ΓΩΝΙΕΣ ΠΕΡΣΙΔΩΝ

Όταν χρησιμοποιείτε λειτουργία COOL ή DRY, μην βάζετε τη περσίδα σε πολύ κάθετη γωνία για μεγάλες περιόδους. Αυτό μπορεί να προκαλέσει διαρροή νερού στο φύλλο της περσίδας, το οποίο θα πέσει στο πάτωμα ή στα έπιπλα. (Βλέπε Εικ. Α)

Όταν χρησιμοποιείτε λειτουργία ΨΥΞΗΣ ή ΘΕΡΜΑΝΣΗΣ, η ρυθμισμένη περσίδα σε κάθετη γωνία μπορεί να μειώσει την απόδοση της μονάδας λόγω περιορισμένης ροής του αέρα.

Μην μετακινείτε τη περσίδα χειροκίνητα. Αυτό μπορεί να έχει σαν αποτέλεσμα τη παρεμπόδιση του συγχρονισμού της περσίδας. Αν αυτό συμβεί, απενεργοποιήστε τη μονάδα και αποσυνδέστε τη για μερικά δευτερόλεπτα και επανεκκινήστε. Αυτό θα επαναφέρει τη περσίδα.

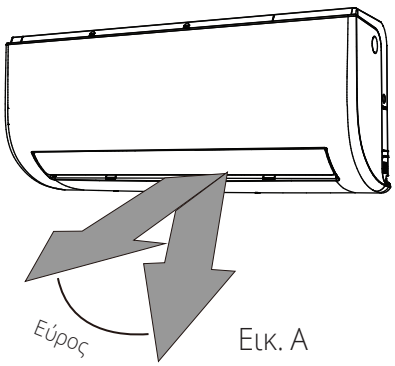

Εικ. A

Προσοχή: Μην κρατάτε τη περσίδα σε πολύ κάθετη γωνία για πολύ μεγάλο χρονικό διάστημα. Αυτό μπορεί να προκαλέσει διαρροή νερού πάνω στα έπιπλά σας.

ΠΡΟΣΟΧΗ

Μην βάζεται τα δάχτυλά σας κοντά στη έξοδο του αέρα. Η υψηλή ταχύτητα του αέρα μέσα στη μονάδα μπορεί να προκαλέσει τραυματισμούς.

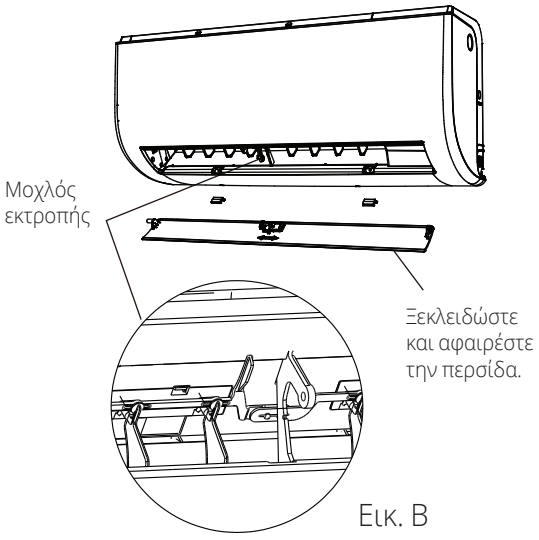

Εικ. B

• Λειτουργία Ύπνου

Η λειτουργία SLEEP χρησιμοποιείτε για να μειώνει την κατανάλωση ενέργειας κατά τη διάρκεια του ύπνου (και δεν χρειάζεται τις ίδιες ρυθμίσεις θερμοκρασίας για άνετο περιβάλλον). Αυτή η λειτουργία μπορεί να ενεργοποιηθεί μόνο από το τηλεχειριστήριο.

Πιέστε το πλήκτρο SLEEP όταν είστε έτοιμοι να πάτε για ύπνο. Όταν είναι σε κατάσταση ΨΥΞΗΣ, η μονάδα θα αυξήσει τη θερμοκρασία από 1° (2°F) μετά από 1 ώρα και θα αυξήσει ακόμα 1° (2°F) την επόμενη ώρα. Όταν είναι σε κατάσταση ΘΕΡΜΑΝΣΗΣ, η μονάδα θα μειώσει τη θερμοκρασία σε 1° (2°F) μετά από μια ώρα, και θα τη μειώσει ακόμα 1° (2°F) μετά από μια ώρα.

Θα διατηρήσει τη νέα θερμοκρασία για 7 ώρες και μετά θα απενεργοποιηθεί αυτόματα.

ΣΗΜΕΙΩΣΗ: Η λειτουργία SLEEP δεν είναι διαθέσιμη σε κατάσταση FAN ή DRY.

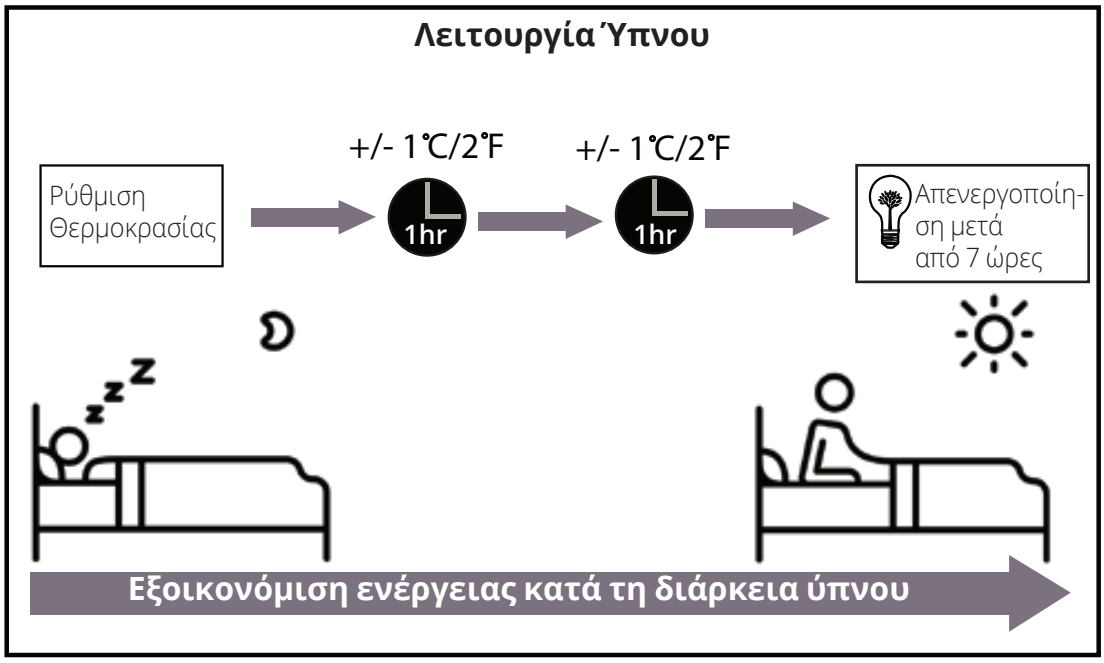

Χειροκίνητη λειτουργία
(Χωρίς τηλεχειριστήριο)

2

Πώς να λειτουργήσετε τη μονάδα χωρίς τηλεχειριστήριο

Στη περίπτωση που το τηλεχειριστήριο δεν δουλεύει, το κλιματιστικό μπορεί να λειτουργήσει και χειροκίνητα με το MANUAL CONTROL κουμπί που βρίσκεται στην εσωτερική μονάδα. Σημειώστε ότι η χειροκίνητη λειτουργία δεν είναι μακροπρόθεσμη λύση και αυτό που συστήνετε είναι η χρήση της μονάδας με το τηλεχειριστήριο.

ΠΡΙΝ ΤΗΝ ΧΕΙΡΟΚΙΝΗΤΗ ΛΕΙΤΟΥΡΓΙΑ

Η μονάδα πρέπει να απενεργοποιείται πριν τη χειροκίνητη λειτουργία της.

Για να λειτουργήσετε τη μονάδα χειροκίνητα:
1. Βρές το MANUAL CONTROL κουμπί στη δεξιά πλευρά του πάνελ της μονάδας
2. Πατήστε το MANUAL CONTROL κουμπί μια φορά να ενεργοποιήσετε ξανά τη κατάσταση FORCED AUTO.
3. Πατήστε το MANUAL CONTROL κουμπί ξανά να ενεργοποιήσετε τη κατάσταση FORCED COOLING.
4. Πατήστε το MANUAL CONTROL κουμπί τρίτη φορά να κλείσετε το κλιματιστικό.

ΠΡΟΣΟΧΗ

Το κουμπί manual στοχεύει σε έλεγχο και έκτακτης ανάγκης λειτουργία μόνο. Παρακαλείσθε να μην χρησιμοποιείτε αυτή τη λειτουργία εκτός αν έχετε χάσει το τηλεχειριστήριο και είναι απολύτως αναγκαίο. Για να επαναφέρετε τις κανονικές λειτουργίες, χρησιμοποιήστε το τηλεχειριστήριο να ενεργοποιήσετε τη μονάδα.

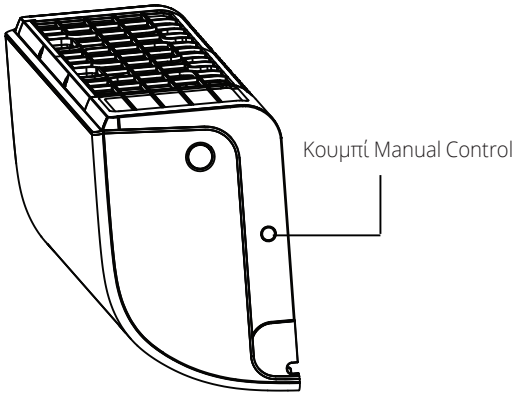

Καθαρισμός και Συντήρηση

3

Καθαρισμός Εσωτερικής Μονάδας

ΠΡΙΝ ΤΟΝ ΚΑΘΑΡΙΣΜΟ Ή ΤΗ ΣΥΝΤΗΡΗΣΗ

ΑΠΕΝΕΡΓΟΠΟΙΕΙΤΕ ΤΟ ΚΛΙΜΑΤΙΣΤΙΚΟ ΚΑΙ ΑΠΟΣΥΝΔΕΣΤΕ ΤΗ ΠΑΡΟΧΗ ΡΕΥΜΑΤΟΣ ΠΡΙΝ ΤΟΝ ΚΑΘΑΡΙΣΜΟ ΚΑΙ ΤΗ ΣΥΝΤΗΡΗΣΗ.

ΠΡΟΣΟΧΗ

Εάν η εσωτερική μονάδα είναι πολύ βρώμικη, μπορείτε να την καθαρίσετε με ένα βρεγμένο πανί και έπειτα να σκουπίσετε με ένα στεγνό πανί.

· **Μην** χρησιμοποιείτε χημικά ή επεξεργασμένο ξεσκονόπανο για τον καθαρισμό.

· **Μην** χρησιμοποιείτε βενζίνη, διαλυτικά, στιλβωτικά ή παρόμοια διαλύμματα για τον καθαρισμό. Μπορεί να προκαλέσουν παραμόρφωση ή ράγισμα στις πλαστικές επιφάνειες της μονάδας.

· **Μην** χρησιμοποιείτε για τον καθαρισμό του μπροστινού πάνελ νερό πάνω από 40°C (104°F). Μπορεί να προκληθεί παραμόρφωση ή αποχρωματισμός.

Καθαρισμός του Φίλτρου Αέρα

Ένα φραγμένο κλιματιστικό μπορεί μειώνει την απόδοση της μονάδας και να είναι βλαβερό για την υγεία σας. Παρακαλούμε να καθαρίζετε τα φίλτρα κάθε 15 ημέρες.

1. Σηκώστε το μπροστινό πάνελ της εσωτερικής μονάδας. Το φίλτρο αέρα κάτω από την εισαγωγή αέρα
2. Τραβήξτε το φίλτρο από τη λαβή στην άκρη ανασηκώνοντάς το ελαφρώς προς τα πάνω και τραβήξτε το προς το μέρος σας.
3. Εάν το φίλτρο σας διαθέτει μικρό φίλτρο για την ανανέωση του αέρα, αποσυνδέστε το από το μεγαλύτερο φίλτρο. Καθαρίστε αυτό το φίλτρο.
4. Καθαρίστε το μεγάλο φίλτρο αέρα με ζεστό, σαπουνώδες νερό. Βεβαιωθείτε ότι χρησιμοποιείτε ήπιο απορρυπαντικό.
5. Καθαρίστε το φίλτρο με φρέσκο νερό, μετά κουνήστε το για να διώξετε το νερό.
6. Στεγνώστε το σε ψυχρό, χωρίς υγρασία δωμάτιο και αποφύγετε την έκθεσή του στον ήλιο.
7. Όταν στεγνώσει, επανατοποθετήστε το φίλτρο ανανέωσης αέρα στο μεγαλύτερο φίλτρο και στη συνέχεια, επανατοποθετήστε το στην εσωτερική μονάδα.

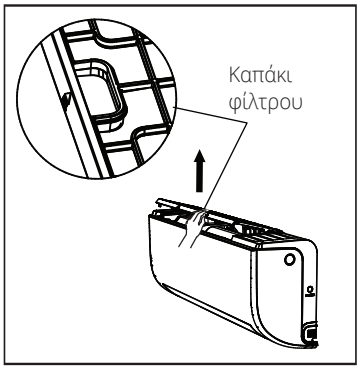

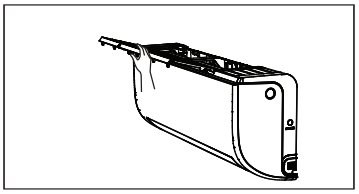

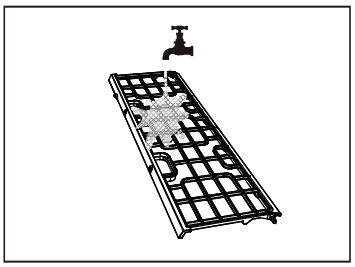

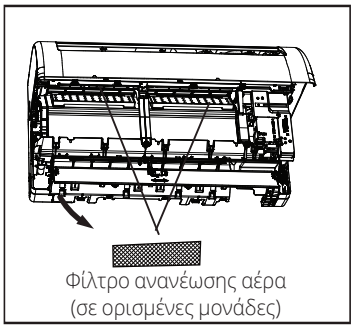

ΠΡΟΣΟΧΗ

Μην αγγίζεται το φίλτρο του κλιματιστικού (Plasma) για τουλάχιστον 10 λεπτά αφότου απενεργοποιήσετε τη μονάδα.

ΠΡΟΣΟΧΗ

• Πριν αλλάξετε τα φίλτρα ή τα καθαρίσετε, απενεργοποιήστε τη μονάδα και αποσυνδέστε από τη παροχή ρεύματος.
• Όταν μετακινείτε τα φίλτρα, μην αγγίζετε τα μεταλλικά μέρη της μονάδας, υπάρχει κίνδυνος τραυματισμού.
• Μην χρησιμοποιείτε νερό για να καθαρίσετε το εσωτερικό μέρος της εσωτερικής μονάδας. Αυτό μπορεί να καταστρέψει τη μόνωση και να προκαλέσει ηλεκτροπληξία.
• Μην εκθέτετε το φίλτρο απευθείας στην ηλιακή ακτινοβολία. Μπορεί να συρρικνωθεί.

ΠΡΟΣΟΧΗ

• Οποιαδήποτε διατήρηση ή καθαρισμός της εξωτερικής συσκευής πρέπει να πραγματοποιείτε από εξουσιοδοτημένο προμηθευτή ή εξειδικευμένο κέντρο σέρβις.
• Κάθε επισκευή κλιματιστικού πρέπει να πραγματοποιείται απο εξουσιοδοτημένο προμηθευτή ή εξειδικευμένο κέντρο σέρβις.

Συντήρηση- Μεγάλες Περίοδοι Μη -Χρήσης

Αν σχεδιάζετε να μην χρησιμοποιήσετε το κλιματιστικό για μεγάλο διάστημα, ακολουθήστε τα παρακάτω:

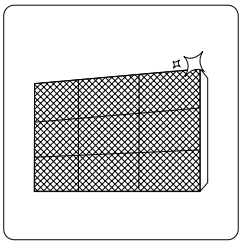
Καθαρίστε όλα τα φίλτρα

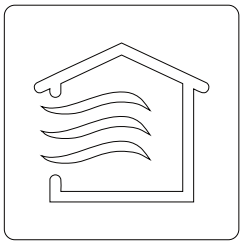
Ενεργοποιήστε τη λειτουργία FAN μέχρι να στεγνώσει η μονάδα τελείως

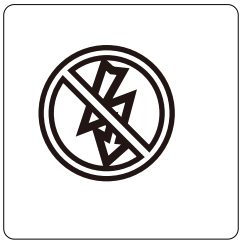
Απενεργοποιήστε τη μονάδα και αποσυνδέστε τη από το ρεύμα

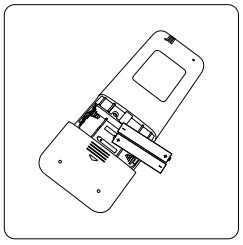
Αφαιρέστε τις μπαταρίες από το τηλεχειριστήριο

Συντήρηση - Πριν την έναρξη της περιόδου χρήσης

Μετά από μεγάλες περιόδους μη χρήσης της συσκευής ή συνεχόμενης χρήσης της, κάντε τα ακόλουθα:

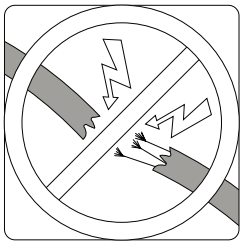
Έλεγχος για κατεστραμμένα καλώδια

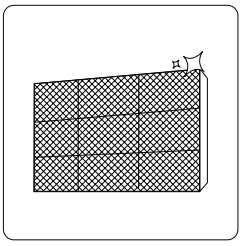
Καθαρίστε όλα τα φίλτρα

Έλεγχος για διαρροές

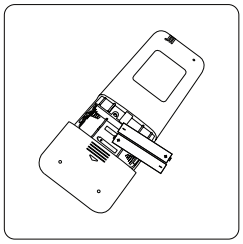
Αντικαταστήστε τις μπαταρίες

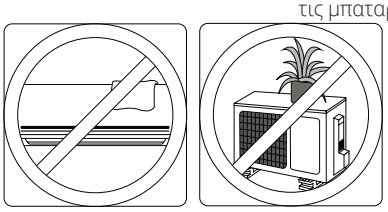
Βεβαιωθείτε ότι τίποτα δεν εμποδίζει όλες τις εισόδους και εξόδους αέρα

Σφάλματα

4

ΟΔΗΓΕΙΕΣ ΑΣΦΑΛΕΙΑΣ

Αν κάποια από τις ακόλουθες συνθήκες συμβαίνει, απενεργοποιήστε το κλιματιστικό σας αμέσως!
- Το καλώδιο παροχής είναι κατεστραμμένο ή ασυνήθιστα ζεστό
- Μυρίζετε μια περίεργη μυρωδιά
- Η μονάδα βγάζει θόρυβο ή ασυνήθιστους ήχους
- Καίγεται συχνά η ασφάλεια ή πέφτει ο ασφαλειοδιακόπτης
- Έπεσε νερό ή άλλο αντικείμενο μέσα στη μονάδα

ΜΗΝ ΠΡΟΣΠΑΘΗΣΕΤΕ ΝΑ ΕΠΙΔΙΟΡΘΩΣΕΤΕ ΜΟΝΟΙ ΣΑΣ! ΕΠΙΚΟΙΝΩΝΗΣΤΕ ΜΕ ΕΞΟΥΣΙΟΔΟΤΗΜΕΝΟ ΚΕΝΤΡΟ ΣΕΡΒΙΣ ΑΜΕΣΩΣ!

Κοινά ζητήματα

Τα ακόλουθα προβλήματα δεν αποτελούν δυσλειτουργίες και στις περισσότερες περιπτώσεις δεν χρίζουν επισκευής.

Ζήτημα	Πιθανά Αίτια
Η μονάδα δεν ενεργοποιείται όταν πατάτε το κουμπί ON/OFF	Η μονάδα έχει 3 λεπτών λειτουργία προστασίας για να προφυλάξει το κλιματιστικό από υπερφόρτωση. Η μονάδα δεν μπορεί να επανεκκινηθεί μέσα σε αυτά τα 3 λεπτά που είναι απενεργοποιημένη.
Η μονάδα αλλάζει από κατάσταση ΨΥΞΗΣ/ΘΕΡΜΑΝΣΗΣ σε FAN κατάσταση	Η μονάδα αλλάζει τις ρυθμίσεις ώστε να αποφύγει την δημιουργία πάγου. Από τη στιγμή που αυξηθεί μια φορά η θερμοκρασία, η μονάδα θα αρχίσει να λειτουργεί με βάση τις προηγούμενες ρυθμίσεις ξανά.
	Έχει επιτευχθεί η επιθυμητή θερμοκρασία και σε αυτό το σημείο ο συμπιεστής απενεργοποιείται. Η μονάδα θα επανενεργοποιηθεί όταν η θερμοκρασία διακυμανθεί ξανά.
Η εσωτερική μονάδα αποβάλλει νεφέλωμα	Σε μέρη με υγρασία, μεγάλη διαφορά θερμοκρασίας μεταξύ του αέρα του δωματίου και του κλιματιστικού μπορεί να προκαλέσει νεφέλωμα.
Η εσωτερική και εξωτερική μονάδα αποβάλει νεφέλωμα	Όταν η μονάδα επανεκκινηθεί σε κατάσταση ΘΕΡΜΑΝΣΗΣ μετά από αποπάγωση λευκό νεφέλωμα μπορεί να αποβληθεί λόγω της υγρασίας που δημιουργείται από τη διαδικασία αποπάγωσης.

Ζήτημα	Πιθανά Αίτια
Η εσωτερική μονάδα κάνει θόρυβο	Ήχος από τον αέρα μπορεί να προκληθεί όταν η περσίδα επαναρυθμίζει τη θέση της.
	Έντονος ήχος μπορεί να προκληθεί αφότου λειτουργήσει η μονάδα σε κατάσταση ΘΕΡΜΑΝΣΗΣ λόγω της επέκτασης και συστολής των πλαστικών μερών της μονάδας.
Η εσωτερική και εξωτερική μονάδα κάνουν θόρυβο	Χαμηλός ήχος σφυρίγματος κατά τη διάρκεια λειτουργίας: Αυτό είναι φυσιολογικό και προκαλείται από το ψυκτικό υγρό που ρέει στην εσωτερική και εξωτερική μονάδα.
	Χαμηλός ήχος σφυρίγματος κατά τη διάρκεια λειτουργίας: Αυτό είναι φυσιολογικό και προκαλείται από το ψυκτικό υγρό που ρέει στην εσωτερική και εξωτερική μονάδα.
	Έντονος ήχος: Φυσιολογική επέκταση και συστολή των πλαστικών και μεταλλικών και προκαλείται από τις θερμοκρασιακές αλλαγές κατά τη διάρκεια της λειτουργίας.
Η εξωτερική μονάδα κάνει θόρυβο	Η μονάδα μπορεί να κάνει διάφορους ήχους βάση της τρέχουσας κατάστασης λειτουργίας.
Σκόνη αποβάλλεται από την εσωτερική ή από την εξωτερική μονάδα	Η μονάδα μπορεί να συσσωρεύει σκόνη αν δεν χρησιμοποιείται για μεγάλες περιόδους, που μπορεί να αποβληθεί κατά την εκκίνησή του. Αυτό μπορεί να περιοριστεί με το να καλύψετε τη μονάδα σε περιόδους μη λειτουργίας.
Η μονάδα αποβάλλει άσχημη μυρωδιά	Η μονάδα μπορεί να απορροφά μυρωδιές από το περιβάλλον (όπως έπιπλα, μαγειρική, τσιγάρα κλπ) τα οποία αποβάλλονται κατά τη λειτουργία.
	Τα φίλτρα της μονάδας έχουν μουχλιάσει και πρέπει να καθαριστούν.
Ο ανεμιστήρας της εξωτερικής μον. δεν λειτουργεί	Κατά τη λειτουργία, η ταχύτητα του ανεμιστήρα ελέγχεται για βέλτιστη απόδοση.
Η λειτουργία είναι ανώμαλη, απρόβλεπτη ή η μονάδα δεν ανταποκρίνεται	Παρεμβολές από τη κεραία της κινητής συσκευής και των ενισχυτών μπορεί να προκαλέσει δυσλειτουργία. Σε αυτή τη περίπτωση, δοκιμάστε: • Αποσυνδέστε από τη πρίζα, ξανά συνδέστε. • Πατήστε το κουμπί ON/OFF ώστε να επανεκκινήσετε τη λειτουργία.

ΣΗΜΕΙΩΣΗ: Αν το πρόβλημα συνεχίσει να υπάρχει, επικοινωνήστε με τον τοπικό προμηθευτή ή το κοντινότερο κέντρο σέρβις. Επεξηγήστε λεπτομερώς τη δυσλειτουργία της μονάδας καθώς και τον αριθμό του μοντέλου.

ΣΦΑΛΜΑΤΑ

Όταν συμβεί κάποιο σφάλμα, παρακαλούμε ελέγξτε τα ακόλουθα πριν επικοινωνήσετε με την εταιρία επισκευής.

Ζήτημα	Πιθανά Αίτια	Λύση
Μειωμένη Απόδοση Ψύξης	Η ρύθμιση της θερμοκρασίας μπορεί να είναι υψηλότερη από τη θερμοκρασία περιβάλλοντος	Ρύθμιση χαμηλότερης θερμοκρασί
	Ο εναλλάκτης θερμότητας στην εσωτερική ή εξωτερική μονάδα είναι βρώμικος.	Καθαρίστε τον εναλλάκτη θερμότητας
	Το φίλτρο αέρα είναι βρώμικο	Αφαιρέστε το φίλτρο και καθαρίστε σύμφωνα με τις οδηγίες
	Η είσοδος ή έξοδος αέρα της κάθε μονάδας είναι φρακαρισμένη	Απενεργοποιήστε τη μονάδα, αφαιρέστε τα εμπόδια και επανενεργοποιήστε
	Οι πόρτες και τα παράθυρα είναι ανοιχτά	Βεβαιωθείτε ότι όλες οι πόρτες και τα παράθυρα είναι κλειστά κατά τη διάρκει λειτουργίας της μονάδας
	Υπερβολική Θερμότητα παράγεται από την ηλιακή ακτινοβολία	Κλείστε τα παράθυρα και τις κουρτίνες κατά τις περιόδους αυξημένης θερμότητας ή ηλιοφάνειας
	Υπερβολικές πηγές θέρμανσης στο δωμάτιο (άνθρωποι, υπολογιστές, ηλεκτρονικές συσκευές κλπ)	Μειώστε τις ποσότητες από τις θερμαντικές πηγές
	Μειωμένο ψυκτικό υγρό λόγω διαρροής ή παρατεταμένης χρήσης	Έλεγχος για διαρροές, κουμπώστε ξανά αν είναι αναγκαίο και γεμίστε με υγρό
	Λειτουργία SILENCE είναι ενεργοποιημένη	Λειτουργία SILENCE μπορεί μειώσει την απόδοση μειώνοντας τις στροφές λειτουργίας. Απενεργοποιήστε τη λειτουργία SILENCE.

Ζήτημα	Πιθανά Αίτια	Λύση
Η μονάδα δεν δουλεύει	Διακοπή Ρεύματος	Αναμονή να επανέλθει το ρεύμα
	Αποσύνδεση από το ρεύμα	Επανεσύνδεση με το ρεύμα
	Καμμένη ασφάλεια	Αντικατάσταση Ασφάλειας
	Έχουν τελειώσει οι μπαταρίες	Αντικαταστήστε τις μπαταρίες
	Η 3 λεπτών προστασία της μονάδας έχει ενεργοποιηθεί	Περιμένετε 3 λεπτά αφότου επανεκκινήσετε τη μονάδα
	Ο Χρονοδιακόπτης έχει ενεργοποιηθεί	Ο Χρονοδιακόπτης έχει απενεργοποιηθεί
Η μονάδα ξεκινάει και σταματάει συχνά	Υπάρχει πολύ ή λίγο ψυκτικό στο σύστημα	Ελέγξτε για διαρροές και ξανά γεμίστε το σύστημα με ψυκτικό υγρό.
	Ασυμπίεστο αέριο ή υγρασία έχει εισέλθει στο σύστημα.	Αδειάστε και ξανά γεμίστε το σύστημα με ψυκτικό υγρό.
	Ο συμπιεστής είναι χαλασμένος	Αντικαταστήστε το συμπιεστή
	Η τάση είναι πολύ υψηλή ή χαμηλή	Εγκαταστήστε ένα μανόμετρο να ρυθμίσετε τη τάση
Μειωμένη απόδοση θέρμανσης	Η εξωτερική θερμοκρασία είναι χαμηλότερη από 7°C (44.5°F)	Χρησιμοποιήστε βοηθητικά θερμαντικά σώματα
	Κρύος αέρας εισέρχεται από πόρτες και παράθυρα	Βεβαιώστε ότι όλες οι πόρτες και τα παράθυρα είναι κλειστά κατά τη διάρκεια της χρήσης
	Μειωμένο ψυκτικό υγρό λόγω διαρροής ή παρατεταμένης χρήσης	Ελέγξτε για διαρροές, κουμπώστε αν είναι απαραίτητο και ξανά γεμίστε με ψυκτικό υγρό.
Οι ενδεικτικές λυχνίες συνεχίζουν να αναβοσβήνουν	Η μονάδα μπορεί να σταματήσει τη λειτουργία ή να τεθεί σε λειτουργία ασφαλείας. Περιμένετε 10 λεπτά αν συνεχίσει να αναβοσβήνει ή εμανιστούν οι κωδικοί σφαλμάτων μήπως η μονάδα επανέλθει από μόνη της. Αν όχι αποσυνδέστε τη από την παροχή ρεύματος και επανασυνδέστε τη. Ενεργοποιήστε τη μονάδα. Εάν το πρόβλημα παραμείνει αποσυνδέστε τη μονάδα από το ρεύμα και επικοινωνήστε με το κοντινότερο κέντρο σέρβις.	
Εάν στην οθόνη εμφανίζεται ένας από τους παρακάτω κωδικούς: **- E0, E1, E2...** **- P1, P2, P3...** **- F1, F2, F3...**		

ΣΗΜΕΙΩΣΗ: Εάν το σφάλμα παραμείνει παρά τους ελέγχους και τις διαγνώσεις, απενεργοποιήστε τη μονάδα αμέσως και επικοινωνήστε με ένα εξουσιοδοτημένο κέντρο σέρβις.

Ευρωπαϊκές Προδιαγραφές Απόρριψης

5

Αυτή η συσκευή εμπεριέχει ψυκτικό και άλλα πιθανώς επικίνδυνα υλικά. Όταν απορρίπτετε τη συσκευή, ο νόμος προϋποθέτει ειδική περισυλλογή και μεταχείριση. Μην απορρίπτετε το προϊόν σαν οικιακά ή μη διαχωρισμένα αστικά απορρίματα.

Όταν απορρίπτεπε τη συσκευή, έχετε τις ακόλουθες περιπτώσεις:

• Απορρίψτε τη συσκευή σε ενδεδειγμένες μονάδες απόρριψης ηλεκτρονικών συσκευών.

•Όταν αγοράζετε νέα συσκευή, ο έμπορος θα πάρει πίσω τη παλιά συσκευή χωρίς χρέωση.

•Ο κατασκευαστής θα πάρει πίσω τη παλιά συσκευή χωρίς χρέωση.

•Πουλήστε τη συσκευή σε πιστοποιημένο έμπορο άχρηστων μετάλλων.

Ειδική Παρατήρηση

Η απόρριψη αυτής της συσκευής σε δάσος ή άλλο φυσικό περιβάλλον θέτει σε κίνδυνο την υγεία σας και και είναι βλαβερό για το περιβάλλον. Επικίνδυνες ουσίες μπορεί να διαρρεύσουν στα υπόγεια ύδατα και να εισέλθουν στη τροφική αλυσίδα.

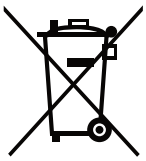

Υποβολή Εγγύησης

- **Επισκεφθείτε τη σελίδα μας και ενεργοποιήστε την εγγύησή σας μέσω του παρακάτω link ή σκανάροντας το QR code**

https://www.inventoraircondition.gr/egiisi-inventor

- **Συμπληρώστε όλα τα πεδία όπως φαίνονται παρακάτω**

Για να ενεργοποιήσετε την εγγύηση, παρακαλούμε συμπληρώστε τα παρακάτω πεδία

Στοιχεία ιδιοκτήτη

Ονοματεπώνυμο*

Διεύθυνση*

Τ.Κ.*

Τηλέφωνο*

Διεύθυνση email*

Να εγγραφώ στο newsletter της Inventor

Στοιχεία μηχανήματος

Τύπος μηχανήματος*

Σειριακός αριθμός εσωτερικού μηχανήματος*

Σειριακός αριθμός εξωτερικού μηχανήματος*

Ημερομηνία αγοράς μηχανήματος*

Αριθμός παραστατικού*

Επιπλέον στοιχεία

*** Απαραίτητο πεδίο**

Αποστέλλοντας τη φόρμα εγγύησης αποδέχεστε τους **όρους και τις προϋποθέσεις.**

ΑΠΟΣΤΟΛΗ

☑ Μόλις ολοκληρωθεί η υποβολή της εγγύησης θα λάβετε την επιβεβαίωση κατοχύρωσης στο email σας

Cuprins

Owner's Manual

0 **Precauţii privind siguranţa** 04

1 **Specificaţii şi caracteristici ale aparatului** 06

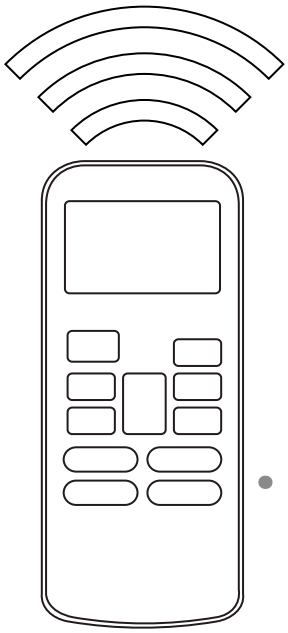

2 **Operare manuală (fără telecomandă)** 11

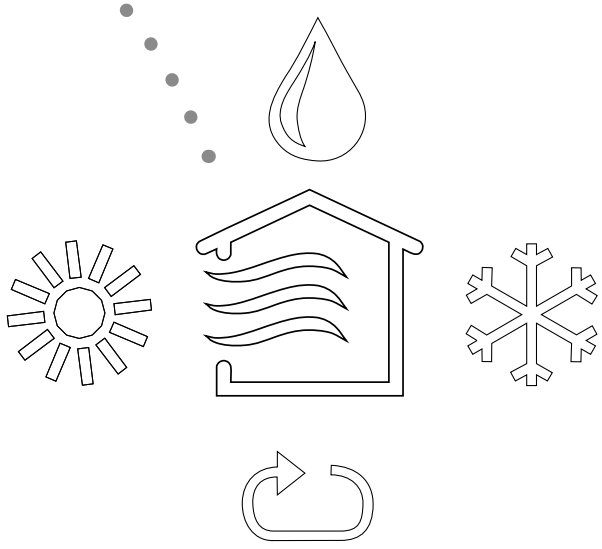

3 **Îngrijire şi mentenanţă** 12

4 **Rezolvarea problemelor** 14

5 **Indicaţii europene pentru eliminare** 18

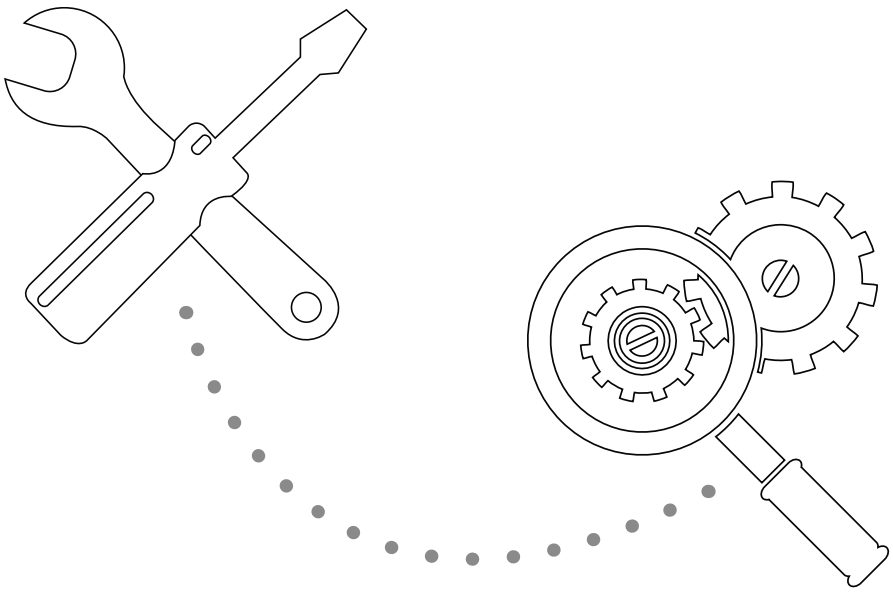

Atentie: **PERICOL DE INCENDIU**
(agent frigorific R32/R290)

ATENTIE: Lucrarile de service vor fi efectuate conform instructiunilor producatorului. Lucrarile de mentenanta si reparatie vor fi efectuate sub supravegherea persoanelor autorizate pentru lucrari cu agenti frigorifici inflamabili. Pentru mai multe informatii, va rugam sa consultati sectiunea :"Informatii cu privire la service" din manualul de instalare. (informatii aplicabile doar unitatilor ce functioneaza cu freon R32/R290).

Precauții privind siguranța

Citiți precauțiile privind siguranța înainte de instalare

Instalarea incorectă datorată ignorării instrucțiunilor poate cauza daune însemnate sau vătămare corporală. Însemnătatea daunelor sau vătămărilor posibile se clasifică fie care AVERTIZARE fie ca ATENȚIONARE.

AVERTIZARE

Acest simbol indică faptul că ignorarea instrucțiunilor poate duce la deces sau vătămare gravă.

ATENȚIONARE

Acest simbol indică faptul că ignorarea instrucțiunilor poate duce la vătămare moderată asupra propriei persoane sau avarierea aparatului sau proprietății dvs.

AVERTIZARE

Acest aparat poate fi utilizat de către copiii de peste 8 ani și de către persoanele cu capacități fizice, senzoriale sau mentale reduse, sau cu lipsă de experiență și cunoștințe dacă sunt supravegheate sau instruite cu privire la utilizarea aparatului în siguranță și dacă înțeleg pericolele asociate cu aceasta. Nu permiteți copiilor să se joace cu aparatul. Curățarea și mentenanța realizată de utilizator nu trebuie realizată de copii fără supraveghere.

AVERTIZĂRI LEGATE DE INSTALARE

- Cereți unui dealer autorizat să instaleze acest aparat de aer condiționat. Instalarea neadecvată poate cauza scurgeri de apă, electrocutare sau incendiu.
- Toate reparațiile, mentenanța și mutarea acestui aparat trebuie realizate de către un tehnician autorizat de service. Reparațiile neadecvate pot duce la vătămări grave sau avarierea produsului.

AVERTIZĂRI LEGATE DE UTILIZAREA PRODUSULUI

- Dacă apare o situație anormală (de genul mirosului de ars), opriți imediat aparatul și trageți din priză. Sunați la dealer pentru instrucțiuni pentru a evita electrocutarea, incendiul sau vătămarea.
- **Nu** introduceți degetele, bețe sau alte obiecte în admisia sau evacuarea de aer. Acest lucru poate cauza vătămare, deoarece ventilatorul se poate roti la viteze mari.
- **Nu** utilizați sprayuri inflamabile de genul fixativului, lacuri sau vopsele în apropierea aparatului. Acest lucru poate duce la incendiu sau explozie.
- **Nu** permiteți funcționarea aparatului de aer condiționat în locuri din apropierea sau din jurul gazelor inflamabile. Gazele emise se pot acumula în jurul aparatului și pot duce la explozie.
- **Nu** permiteți funcționarea aparatului de aer condiționat într-o cameră cu umiditate mare (de exemplu baia sau camera pentru spălat rufe). Acest lucru poate duce la electrocutare și poate cauza deteriorarea produsului.
- **Nu** vă expuneți corpul în mod direct la aerul rece pentru perioade lungi de timp.

AVERTIZĂRI LEGATE DE ELECTRICITATE

- Utilizați doar cablul de alimentare indicat. Dacă acest cablu de alimentare este avariat, el trebuie înlocuit de către producător sau de către un agent de service autorizat.
- Mențineți ștecherul curat. Îndepărtați praful sau murdăria ce se adună pe sau în jurul ștecherului. Ștecherele murdare pot duce la incendiu sau electrocutare.
- **Nu** trageți de cablul de alimentare pentru a scoate din priză aparatul. Apucați ferm de ștecher și scoateți din priză. Trasul direct de cablul de alimentare poate duce la avarierea lui ce poate conduce la incendiu sau electrocutare.
- **Nu** utilizați un prelungitor, nu extindeți manual cablul de alimentare, și nu conectați alte aparate la aceeași priză ca și cea a aparatului de aer condiționat. Legăturile electrice slabe, izolarea proastă și voltaj insuficient pot duce la incendiu.

AVERTIZĂRI LEGATE DE CURĂȚARE ȘI MENTENANȚĂ

- Opriți aparatul și scoateți din priză înainte de a-l curăța. Dacă nu faceți acest lucru vă puteți electrocuta.
- **Nu** curățați aparatul de aer condiționat cu o cantitate mare de apă.
- **Nu** curățați aparatul de aer condiționat cu agenți de curățare inflamabili. Agenții de curățare inflamabili pot duce la incendiu sau deformare.

ATENȚIONĂRI

- Dacă aparatul de aer condiționat este utilizat cu arzătoare sau alte aparate pentru încălzit, aerisiți foarte bine camera pentru a evita lipsa oxigenului.
- Opriți aparatul de aer condiționat și scoateți din priză aparatul dacă nu intenționați să îl utilizați pentru o perioadă lungă de timp.
- Opriți și scoateți din priză aparatul în timpul furtunilor.
- Asigurați-vă că apa rezultată din condens se poate scurge din aparat
- **Nu** manevrați aparatul de aer condiționat cu mâinile ude. Acest lucru poate duce la electrocutare. Nu utilizați aparatul în alte scopuri decât pentru utilizarea specificată.
- **Nu** vă urcați pe sau nu puneți obiecte pe unitatea exterioară.
- **Nu** permiteți aparatului de aer condiționat să funcționeze perioade lungi de timp cu ușile și ferestrele deschise, sau dacă umiditatea este foarte mare.

Explicarea simbolurilor afisate pe unitatile interioare/exteriorare (valabil doar pentru aparatele care folosesc agent frigorific R32/R290):

	AVERTIZARE	Acest simbol va subliniaza faptul ca aparatul utilizeaza agent frigorific inflamabil. In cazul unei scurgeri, poate aparea pericolul declansarii unui incendiu.
	ATENTIONARE	Acest simbol va atentioneaza ca manualul de utilizare trebuie citit cu atentie.
	ATENTIONARE	Acest simbol va atentioneaza asupra faptului ca personalul autorizat va trebui sa respecte cu strictete manualul de instalare.
	ATENTIONARE	
	ATENTIONARE	Acest simbol va atentioneaza ca informatiile necesare pot fi gasite in manualul de utilizare sau manualul de instalare.

Specificații și caracteristici ale aparatului

1

Componente ale aparatului

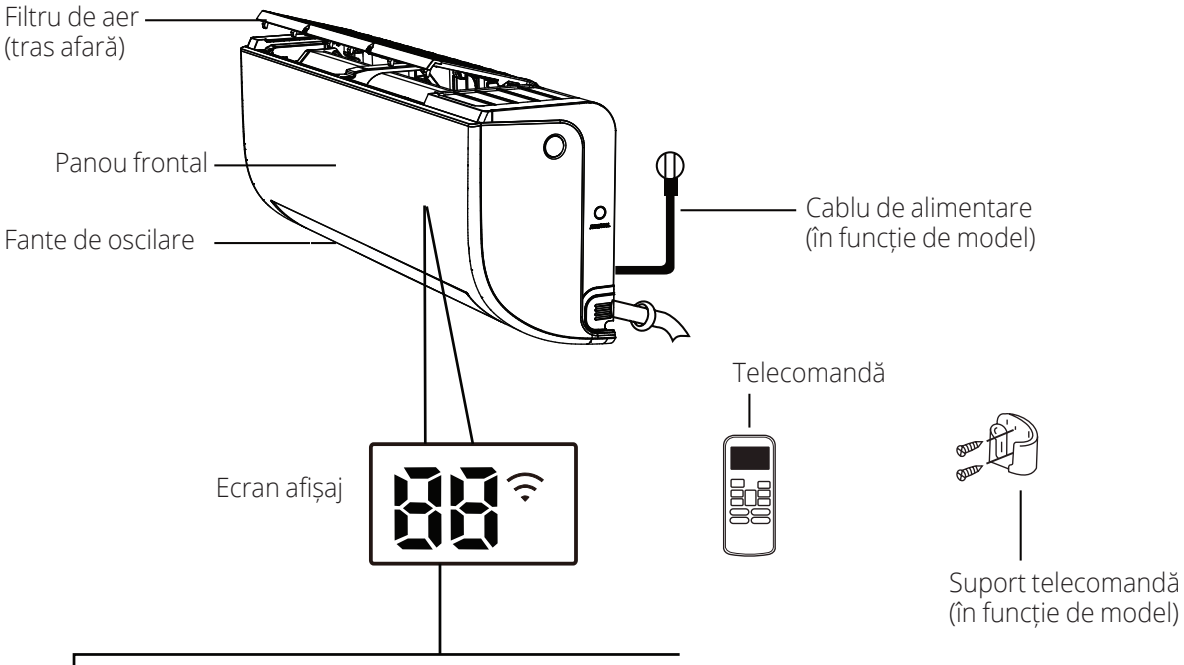

Semnificație coduri afișate

ON pentru 3 secunde atunci când:
• TEMPORIZATORUL este pornit
• Funcțiile REÎMPROSPĂTARE, OSCILARE; TURBO sau SILENȚIOS sunt activate

OF pentru 3 secunde atunci când:
• TEMPORIZATORUL este oprit
• Funcțiile REÎMPROSPĂTARE, OSCILARE; TURBO sau SILENȚIOS sunt dezactivate

cF atunci când funcția împotriva aerului rece este activată

dF în timpul degivrării

SC atunci când aparatul este pornit pe auto-curățare

FP atunci când este pornită protecția la îngheț

când funcția de control prin WIFI este activată (în funcție de model)

88 atunci când este activată funcție ECONOMISIRE (în funcție de model), simbolul "88" se aprinde intermitent ca și E -- C -- 0 --setare temperatură -E.....En la intervale de o secundă.

În alte module, aparatul va afișa setarea dvs. de temperatură. În modulul Ventilare, aparatul va afișa temperatura camerei.

NOTĂ: Instrucțiuni pentru utilizarea telecomenzii cu infraroșu nu sunt incluse în acest manual

Atingerea Performanței optime

Performanța optimă pentru modulele RĂCIRE, ÎNCĂLZIRE și DEZUMIDIFICARE poate fi atinsă în următoarele intervale de temperatură. Atunci când aparatul de aer condiționat este folosit în afara acestor intervale, anumite funcții de protecție a siguranței se vor activa iar aparatul va funcționa mai puțin eficient.

Invertor de tip split

<table>
<tr><th></th><th>Modul RĂCIRE</th><th>Modul ÎNCĂLZIRE</th><th>Modul DEZUMIDIFICARE</th></tr>
<tr><td>Temperatura camerei</td><td>17°C - 32°C
(63°F - 90°F)</td><td>0°C - 30°C
(32°F - 86°F)</td><td>10°C - 32°C
(50°F - 90°F)</td></tr>
<tr><td rowspan="3">Temperatura din exterior</td><td>0°C - 50°C
(32°F - 122°F)</td><td rowspan="3">-15°C - 30°C
(5°F - 86°F)</td><td rowspan="2">0°C - 50°C
(32°F - 122°F)</td></tr>
<tr><td>-15°C - 50°C
(5°F - 122°F)
(Pentru modele cu sisteme de răcire la temp. scăzute)</td></tr>
<tr><td>0°C - 60°C
(32°F - 140°F)
(Pentru modele tropicale speciale)</td><td>0°C - 60°C
(32°F - 140°F)
(Pentru modele tropicale speciale)</td></tr>
</table>

PENTRU APARATE CU ÎNCĂLZIRE ELECTRICĂ SUPLIMENTARĂ

Atunci când temperatura din exterior este mai mică de 0°C (32°F), vă recomandăm insistent să păstrați aparatul în priză mereu pentru a asigura o performanță continuă bună.

Tipul de aparat cu viteză fixă

<table>
<tr><th></th><th>Modul RĂCIRE</th><th>Modul ÎNCĂLZIRE</th><th>Modul DEZUMIDIFICARE</th></tr>
<tr><td>Temperatura camerei</td><td>17°-32°C (63°-90°F)</td><td>0°-30°C (32°-86°F)</td><td>13°-32°C (50°-90°F)</td></tr>
<tr><td rowspan="3">Temperatura din exterior</td><td>18°-43°C (64°-109°F)</td><td rowspan="3">-7°-24°C (19°-75°F)</td><td>18°-43°C (64°-109°F)</td></tr>
<tr><td>-7°-43°C (19°-109°F)
(Pentru modele cu sisteme de răcire la temp. scăzute)</td><td>18°-43°C (64°-109°F)</td></tr>
<tr><td>18°-54°C (64°-129°F)
(Pentru modele tropicale speciale)</td><td>18°-54°C (64°-129°F)
(Pentru modele tropicale speciale)</td></tr>
</table>

Pentru a optimiza performanţa aparatului dvs., vă rugăm să luaţi următoarele acţiuni:

- Să țineți ușile și ferestrele închise.
- Să limitați utilizarea energiei electrice prin folosirea funcțiilor de TEMPORIZARE PORNITĂ și TEMPORIZARE OPRITĂ.
- Nu blocați admisia sau evacuarea aerului.
- Verificați regulat și curățați filtrele de aer

Pentru explicații detaliate ale fiecărei funcții, consultați manualul telecomenzii.

Alte funcții

- **Repornirea automată**
  Dacă aparatul este deconectat de la alimentare va reporni automat utilizând setările anterioare de îndată ce alimentarea este restabilită.

- **Funcţia anti-mucegai (care nu sunt incluse în acest model)**
  La oprirea aparatului din modulele RĂCIRE, AUTOMAT (RĂCIRE) sau DEZUMIDIFICARE aparatul de aer condiționat va continua să funcționeze în mod economic pentru a usca apa condensată și a preveni apariția mucegaiului.

- **Funcţionarea silenţioasă**
  Apăsați butonul LED de pe telecomandă pentru a închide afișajul de pe ecranul unității interioare și pentru a închide sunetul bâzâit al aparatului de aer condiționat, creând astfel un mediu confortabil și silențios.

- **Control Wi-Fi**
  Controlul Wi-Fi vă permite să controlați aparatul de aer condiționat folosind telefonul mobil și o conexiune Wi-Fi.

- **Memorarea unghiului fantei de oscilare**
  La pornirea aparatului dvs., fanta de oscilare va fi poziționată automat în unghiul folosit anterior.

- **Detectarea scurgerilor de agent frigorific**
  Unitate interioară va afișa automat „EC" atunci când detectează scurgeri de agent frigorific.

Pentru explicații detaliate cu privire la funcționarea avansată a aparatului dvs. (cum ar fi modulul TURBO și funcțiile de curățare automată) vă rugăm **consultați manualul telecomenzii.**

NOTĂ PRIVIND IMAGINILE

Imagine din prezentul manual au scop explicativ. Forma reală a unității dvs. interioare poate fi ușor diferită. Forma reală va fi cea care va prevala.

• Setarea unghiului pentru fuxul de aer

Setarea unghiului orizontal pentru fluxul de aer

Unghiul orizontal al fluxului de aer trebuie setat manual. Apucaţi tija deflectorului (Fig. 2.3) şi potriviţi manual direcţia conform preferinţelor dvs. În funcţie de model, unghiul orizontal al fluxului de aer poate fi setat prin telecomandă. Vă rugăm consultaţi manualul telecomenzii.

NOTĂ PRIVIND UNGHIURILE FANTELOR

La utilizarea modulului RĂCIRE sau DEZUMIDIFICARE, nu setați fanta la un unghi prea vertical pentru perioade lungi de timp. Acest lucru poate duce la condensarea apei pe lamelele fantei, apă ce poate cădea pe podea sau pe mobilă. (Fig. A)

La utilizarea modulului RĂCIRE sau ÎNCĂLZIRE, setarea fantei la un unghi prea vertical poate reduce performanța aparatului datorită fluxului de aer restricționat.

Nu mișcați fanta cu mâna. Acest lucru va duce la dereglare fantei. Dacă se întâmpla acest lucru, opriți aparatul și scoateți-l din priză pentru câteva secunde, apoi reporniți aparatul. Acest lucru va reseta fanta de oscilare.

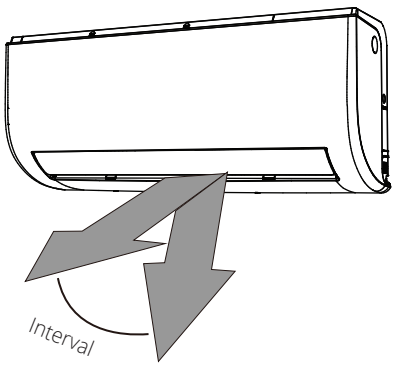

Atenţie: nu menţineţi fanta de oscilare la un unghi prea vertical pentru perioade lungi de timp. Acest lucru va duce la condensarea apei şi picurarea ei pe mobilier.

ATENŢIONARE

Nu introduceţi degetele în sau în apropiere de partea de evacuare şi admisie a aparatului. Viteza mare a ventilatorului din interior poate duce la vătămare.

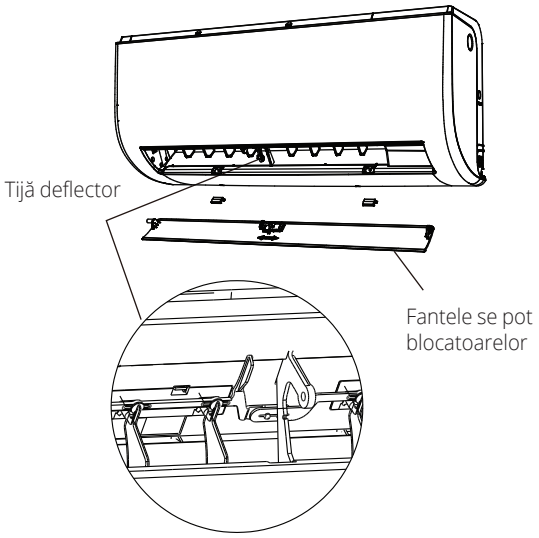

• Funcționarea în modul în așteptare

Funcția ÎN AȘTEPTARE este utilizată pentru a scădea consumul de energie în timp ce dormiți (și nu aveți nevoie de aceeași setare de temperatură pentru a vă simți confortabil). Această funcție poate fi activată doar cu ajutorul telecomenzii.

Apăsați butonul ÎN AȘTEPTARE atunci când vă pregătiți de culcare. Când se află în modul RĂCIRE, aparatul va crește temperatura cu 1°C (2° F) după o oră și va crește suplimentar cu câte 1°C (2° F)după fiecare oră. Atunci când se află în modul ÎNCĂLZIRE, aparatul va scădea temperatura cu 1°C(2° F)după o oră și va scădea suplimentar cu câte 1°C(2° F) după fiecare oră.

Acesta va păstra noua temperatură timp de 7 ore, după care aparatul se va opri automat.

Notă: funcția ÎN AȘTEPTARE nu este disponibilă în modulul VENTILARE sau DEZUMIDIFICARE.

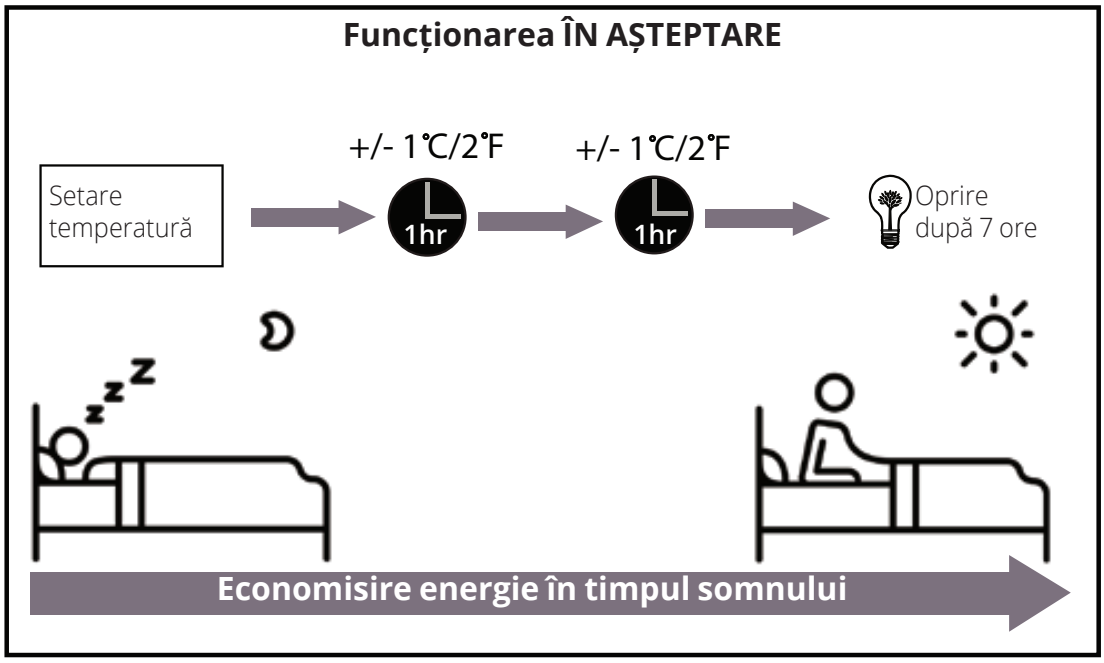

Operarea manuală (fără telecomandă)

2

Cum să operați aparatul dvs. fără telecomandă

În cazul în care telecomanda dvs. nu mai funcționează, aparatul poate fi operat manual cu ajutorul butonului de control manual de pe unitatea interioară. Vă rugăm să luați în considerare că funcționarea manuală nu este o soluție pe termen lung și că funcționarea aparatului cu ajutorul telecomenzii este insistent recomandată.

ÎNAINTE DE OPERAREA MANUALĂ

Aparatul trebuie oprit înainte de operarea manuală

Pentru a opera manual aparatul:

1. Localizați butonul de CONTROL MANUAL de pe partea dreaptă a unității.
2. Apăsați butonul de CONTROL MANUAL odată pentru a activa modulul AUTOMAT FORȚAT.
3. Apăsați din nou butonul CONTROL MANUAL pentru a activa modulul RĂCIRE FORȚATĂ.
4. Apăsați butonul CONTROL MANUAL a treia oară pentru a opri aparatul.

AVERTIZARE

Butonul manual este destinat scopurilor de testare și funcționării în caz de urgență. Vă rugăm nu folosiți această funcție decât dacă telecomanda este pierdută sau acest lucru este absolut necesar. Pentru a reveni la funcționarea normală, utilizați telecomanda pentru a activa aparatul.

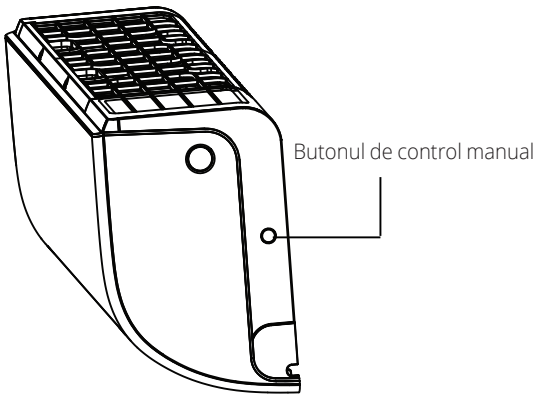

Îngrijire și mentenanță

3

Curățarea unității interioare

ÎNAINTE DE CURĂŢARE SAU MENTENANŢĂ

OPRIȚI ÎNTOTDEAUNA SISTEMUL DE AER CONDIȚIONAT ȘI SCOATEȚI DIN PRIZĂ ÎNAINTE DE CURĂȚARE SAU MENTENANȚĂ.

ATENŢIONARE

Utilizați doar o cârpă moale și uscată pentru a șterge aparatul. Dacă aparatul este foarte murdar, puteți folosi o cârpă înmuiată în apă caldă pentru a-l șterge.

• Nu utilizați chimicale și cârpe tratate chimic pentru a curăța aparatul

• Nu utilizați benzen, diluant, praf de curățat sau alți solvenți pentru a curăța aparatul. Acest lucru poate duce la crăparea sau deformarea capacului de plastic.

• Nu folosiți apă mai caldă de 40°C (104°F) pentru a curăța panoul frontal. Acest lucru poate duce la deformarea panoului sau decolorarea acestuia.

Curățarea filtrului de aer

Un aparat de aer condiţionat înfundat poate reduce eficienţa de răcire a aparatului dvs. şi vă poate dăuna sănătăţii.

Asiguraţi-vă că filtrul este curăţat o dată la două săptămâni.

1. Ridicați panoul frontal al unității interioare. Filtrul de aer se află sub grilajul de admisie aer de sus.
2. Apucați butonul de la capătul filtrului, ridicați-l și trageți-l spre dvs..
3. Daca filtrul dumneavoastra de aer are disponibil un filtrul pentru improspatarea aerului, detasati acel filtru si curatati-l cu ajutorul unui asipirator.
4. Curățați filtrul de aer mare cu apă caldă cu săpun.Este important să folosiți un detergent delicat.
5. Clătiți filtrul cu apă curată apoi scuturați excesul de apă.
6. Uscaţi-l într-un loc răcoros şi uscat şi nu îl expuneţi în lumina directă a soarelui.
7. Dupa uscare, atasati filtrul pentru improspatarea aerului de filtrul de aer si apoi introduceti-le in unitatea interioara.

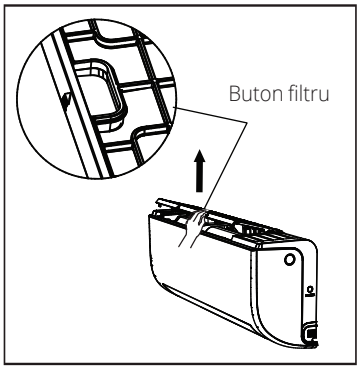

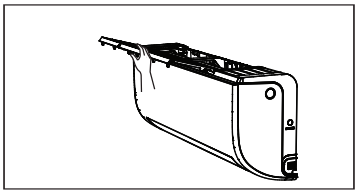

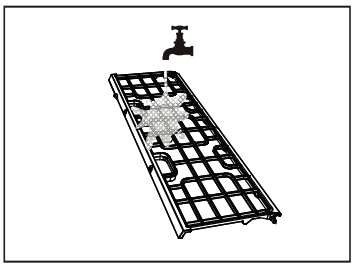

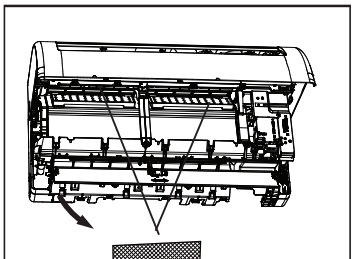

Filtru pentru improspatarea aerului (valabil doar la anumite unitati).

ATENŢIONARE

Nu atingeți filtrul de împrospătare aer (plasma) pentru cel puțin 10 minute după oprirea aparatului.

ATENŢIONARE

• Înainte de a schimba sau curăța filtrul, opriți aparatul și scoateți-l din priză.
• La îndepărtarea filtrului, nu atingeți părțile metalice din aparat. Marginile metalice ascuțite vă pot tăia.
• Nu utilizați apa pentru a curăța interiorul unității interioare. Acest lucru poate distruge izolarea și poate duce la electrocutare.
• Nu expuneți filtrul în lumina directă a soarelui în timpul uscării. Acest lucru poate micșora filtrul.

ATENȚIONARE

• Orice acțiune de mentenanță sau curățare a unității exterioare va fi efectuată de către un dealer autorizat sau un furnizor de service autorizat.
• Orice reparații ale aparatului trebuie realizate de către un dealer autorizat sau un furnizor de service autorizat.

Mentenanță – Perioade lungi de neutilizare

Dacă plănuiţi să nu utilizaţi aparatul de aer condiţionat pe o perioadă mai mare de timp, luaţi următoarele măsuri:

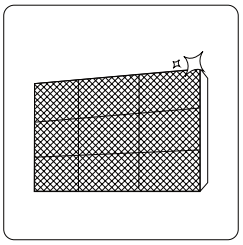

Curățați toate filtrele

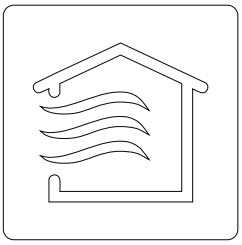

Porniți funcția de ventilare până la uscarea completă

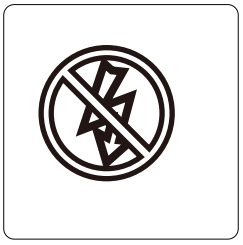

Opriți aparatul și deconectați de la alimentarea electrică

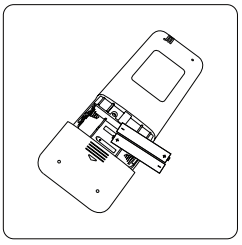

Îndepărtați bateriile din telecomandă

Mentenanță – Inspecția înainte de sezon

Dacă plănuiţi să nu utilizaţi aparatul de aer condiţionat pe o perioadă mai mare de timp, luaţi următoarele măsuri:

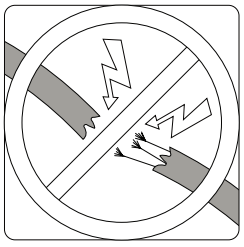

Verificați avarierea firelor

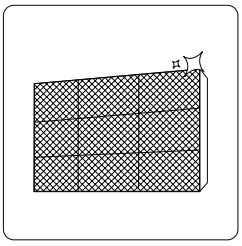

Curățați toate filtrele

Verificați să nu existe scurgeri

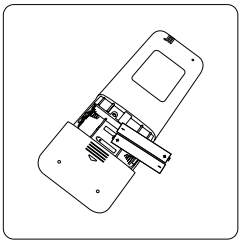

Înlocuiți bateriile

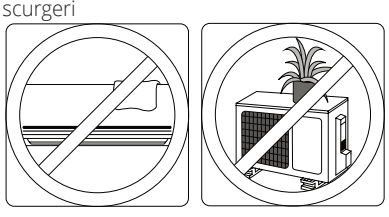

Asigurați-vă că admisia /evacuarea aer nu sunt blocate

Rezolvarea problemelor

4

PRECAUŢII PRIVIND SIGURANŢA

Dacă apare ORICARE din următoarele condiții, opriți aparatul imediat!
- Cablul de alimentare este avariat sau anormal de cald
- Simțiți un miros de ars
- Unitatea scoate zgomote puternice sau anormale
- Se arde o siguranță sau întrerupătorul se declanșează frecvent
- Apă sau alte obiecte cad în sau pe aparat

NU ÎNCERCAȚI SĂ REZOLVAȚI SINGURI ACESTE PROBLEME, CONTACTAȚI FURNIZORUL DE SERVICE AUTORIZAT IMEDIAT!

Probleme obişnuite

Următoarele probleme nu reprezintă o defecţiune şi în majoritatea situaţiilor nu necesită reparaţii.

Problemă	Cauze posibile
Aparatul nu porneşte la apăsarea butonului pornire / oprire	Aparatul are o funcţie de protecţie de 3 minute ce previne supraîncălzirea aparatului. Aparatul nu poate fi repornit în cadrul celor trei minute de la oprire.
Aparatul se schimbă de pe modul RĂCIRE / ÎNCĂLZIRE pe modul VENTILARE	Aparatul îşi poate schimba setările pentru a preveni acumularea gheţii pe aparat. Odată ce temperatura creşte, aparatul va funcţiona în modul de funcţionare selectat anterior.
	Temperatura setată a fost atinsă, moment în care aparatul opreşte compresorul. Aparatul va continua funcţionarea atunci când temperatura fluctuează din nou.
Unitatea interioară emană o ceaţă albă	În zonele cu umiditate ridicată, o diferenţă mare de temperatură între aerul din cameră şi aerul condiţionat pot duce la formarea de ceaţă albă.
Atât unitatea interioară cât şi cea exterioară emană o ceaţă albă	Atunci când aparatul care porneşte în modulul ÎNCĂLZIRE după degivrare, o ceaţă albă poate fi emanată datorită umezelii generate de procesul de degivrare.

Problemă	Cauze posibile
Unitatea interioară scoate zgomot	Un zgomot de circulare a aerului poate apărea la resetarea poziţiei fantei de oscilare.
	Un sunet de scârţâit poate apărea la funcţionarea aparatului în modul ÎNCĂLZIRE datorită dilatării şi contracţiei părţilor din plastic ale aparatului.
Atât unitatea interioară cât şi cea exterioară scot zgomote	Un sunet încet şuierat în timpul funcţionării: acest lucru este normal şi este cauzat de scurgerea gazului frigorific atât prin unitatea interioară cât şi prin cea exterioară.
	Sunet încet de şuierat la pornirea sistemului, atunci când funcţionarea este oprită sau în timpul degivrării. Acest zgomot este normal şi este cauzat de gazul frigorific care se opreşte şi îşi schimbă direcţia.
	Un sunet de scârţâit: dilatarea şi contracţia normală a plasticului şi a pieselor din metal cauzată de schimbările de temperatură din timpul funcţionarii pot duce la un zgomot de scârţâit.
Unitate exterioară scoate zgomote	Aparatul va scoate diferite sunete în funcţie de modul de funcţionare actual.
Iese praf fie din unitatea interioară fie din cea exterio	Aparatul poate acumula praf pe parcursul perioadelor lungi de neutilizare, praf ce va fi eliminat atunci când aparatul este pornit. Acest lucru poate fi diminuat prin acoperirea aparatului pe timpul perioadelor lungi de inactivitate.
Aparatul emană un miros neplăcut	Aparatul poate absorbi mirosuri din mediul înconjurător (cum ar fi cel de mobilă, de la gătit, de ţigări etc.) care va fi emis în timpul funcţionării
	Filtrele aparatului au mucegăit şi trebuie curăţate.
Ventilatorul unităţii exterioare nu funcţionează	În timpul funcţionării, viteza ventilatorului este controlată pentru a optimiza funcţionarea produsului.
Funcţionarea este haotică, imprevizibilă sau aparatul nu răspunde comenzilor	Interferente de la relee de telefonie mobilă şi amplificatoare de la distanţă pot duce la funcţionarea defectuoasă a aparatului. În acest caz încercaţi următoarele: • Deconectaţi de la energia electrică apoi reporniţi; • Apăsaţi butonul PORNIRE / OPRIRE de pe telecomandă pentru a restabili funcţionarea.

NOTĂ: dacă problema persistă, contactaţi un dealer local de la cel mai apropiat centru de service pentru clienţi. Vă rugăm să le furnizaţi o descriere detaliată a defecţiunii aparatului cât şi numărul modelului dvs.

Rezolvarea problemelor

Atunci când apar probleme, vă rugăm verificaţi următoarele puncte înainte de a contacta compania pentru reparaţii.

Problemă	Cauze posibile	Soluţie
Performanţă slabă de răcire	Setarea temperaturii poate fi mai mare decât temperatura ambientală.	Scădeţi setările de temperatu.
	Schimbătorul de căldură de pe unitatea interioară sau exterioară este murdar.	Curăţaţi schimbătorul de căldură afectat.
	Filtrul de aer este murdar.	Înlăturaţi filtrul şi curăţaţi-l conform instrucţiunilor.
	Admisia sau evacuarea de aer a oricărei dintre unităţi este blocată.	Opriţi aparatul, îndepărtaţi obstrucţiile şi porniţi-l din nou.
	Uşile sau ferestrele sunt deschise.	Asiguraţi-vă că toate uşile şi ferestrele sunt închise în timpul funcţionării aparatului.
	O căldură excesivă este generată de lumina soarelui.	Închideţi ferestrele şi perdelele în perioadele călduroase sau cele cu lumina puternică a soarelui.
	Există prea multe surse de încălzire în cameră (oameni, computere, electronice, etc.).	Reduceţi cantitatea surselor de căldură.
	Agentul frigorific este puţin datorită scurgerilor sau utilizării îndelungate.	Verificaţi pentru scurgeri, resigilaţi dacă este necesar şi adăugaţi agent frigorific.
	Funcţia SILENŢIOS este activată.	Funcţia SILENŢIOS poate duce la o performanţă scăzută a produsului prin reducerea funcţionării frecvente. Opriţi funcţia SILENŢIOS.

Problemă	Cauze posibile	Soluţie
Aparatul nu funcţionează	Cădere de curent	Aşteptaţi revenirea electricităţii
	Alimentarea este oprită.	Porniţi aparatul.
	Siguranţa s-a ars.	Înlocuiţi siguranţa.
	Bateriile telecomenzii sunt terminate.	Înlocuiţi bateriile.
	Este activată protecţia de 3 minute a aparatului.	Aşteptaţi trei minute după repornirea aparatului.
	Este activat temporizatorul.	Opriţi temporizatorul.
Aparatul porneşte şi se opreşte des	Agentul frigorific este prea mult sau prea puţin în sistem.	Verificaţi scurgerile şi reîncărcaţi sistemul cu agent frigorific.
	Gaze necompresibile sau umezeala au pătruns în sistem.	Eliminaţi şi reîncărcaţi sistemul cu agent frigorific.
	Compresorul este stricat.	Înlocuiţi compresorul
	Voltajul este prea mare sau prea mic.	Instalaţi un manostat pentru a regla voltajul.
Performanţă scăzută de încălzire	Temperatura exterioară este mai mică de 7°C (44.5°F).	Utilizaţi un dispozitiv de încălzire suplimentar.
	Aerul rece intră pe uşi şi ferestre.	Asiguraţi-vă că toate uşile şi ferestrele sunt închise în timpul utilizării.
	Agentul frigorific este puţin datorită scurgerilor sau utilizării îndelungate.	Verificaţi pentru scurgeri, resigilaţi dacă este necesar şi adăugaţi agent frigorific.
Lumina indicatoare se aprinde intermitent	Aparatul se poate opri din funcţiune sau poate continua să funcţioneze în siguranţă. Dacă lumina indicatorului continuă să se aprindă intermitent sau apar coduri de eroare, aşteptaţi aproximativ 10 minute. Problema se poate rezolva de la sine. Dacă nu, deconectaţi de la energia electrică apoi reconectaţi. Porniţi aparatul. Dacă problema persistă, deconectaţi de la energia electrică şi contactaţi cel mai apropiat centru de service pentru clienţi.	
Apare un cod de eroare pe ecranul de afişaj al unităţii interioare - E0, E1, E2... - P1, P2, P3... - F1, F2, F3...		

NOTĂ: dacă problema persistă după realizarea verificărilor şi diagnostice lor de mai sus, opriţi imediat aparatul şi contactaţi un Centru de Service autorizat.

Indicații europene pentru eliminare 5

Acest aparat conţine agent frigorific şi alte materiale cu potenţial periculos. Atunci când eliminaţi acest aparat, legea prevede o colectare şi tratare specială. Nu eliminaţi acest produs ca şi deşeu menajer sau deşeu municipal nesortat.
La eliminarea acestui aparat, aveţi la dispoziţie următoarele opţiuni:

- Aruncați aparatul în cadrul instalației municipale de colectare a deșeurilor electronice.
- Atunci când achiziționați un nou aparat, comerciantul va prelua vechiul aparat în mod gratuit.
- Producătorul va primi vechiul aparat gratuit.
- Vindeți aparatul către dealeri de fier vechi certificați.

Notificare specială

Aruncarea acestui aparat în pădure sau în alte medii naturale pune în pericol sănătatea dvs. și dăunează mediului înconjurător. Substanţe periculoase se pot scurge în pânza freatică şi pot pătrunde în lanţul alimentar.

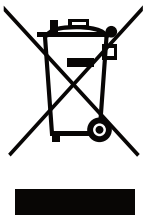

Activati-va garantia

- **Accesati link-ul de mai jos sau scanati codul QR pentru a va activa garantia pe site-ul nostru.**

https://www.inventoraerconditionat.ro/certificatul-de-garantie-inventor-aer-conditionat-si-electrocasnice

- **Completati toate campurile conform exemplului de mai jos**

Pentru a activa garantia, va rugam sa completati urmatoarele campuri

Detalii propietar

Nume complet*

Adresa*

Cod Postal*

Numar de telefon*

E-mail*

Abonati-va la Newsletter-ul Inventor

Detalii unitate

Tip aparat*

Numărul serial al unității interioare*

Numărul serial al unității exterioare*

Data de achizitie*

Numar Factura*

Detalii aditionale

* Camp obligatoriu

Cu acest certificat de garantie acceptati **Termenii si Conditiile.**

TRIMITE

☑ Odata ce garantia a fost activata, veti primi un email de confirmare

AIR CONDITIONING SYSTEMS

WALL MOUNTED UNIT

Scan here to download the latest version of this manual.
Σαρώστε εδώ για να κατεβάσετε την τελευταία έκδοση του εγχειριδίου.

Please check the applicable models,
F-GAS and manufacturer information from the “Owner’s Manual - Product Fiche” in the packaging of the outdoor unit. (European Union products only).